testo 6381 Ethernet · differential pressure transmitter

testo 6610 · Probes

P2A software · Parameterizing, adjusting and analyzing software

Instruction manual Volume 1

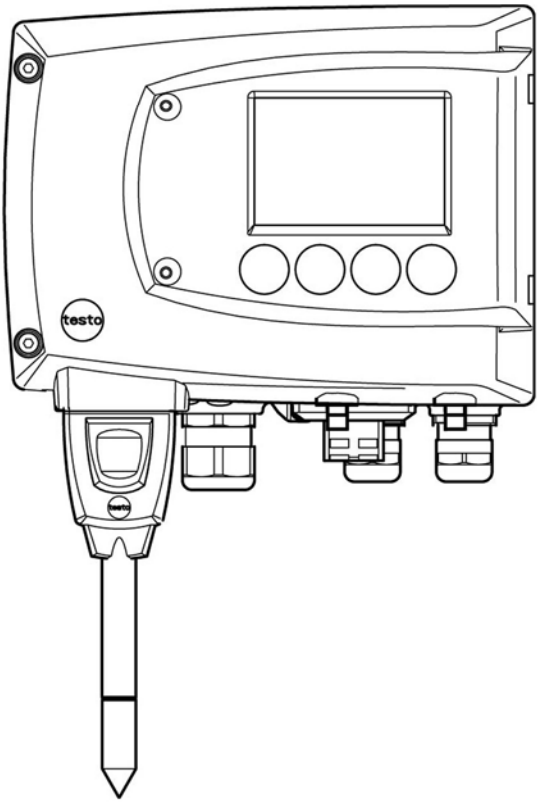

Find Quality Products Online at: Valuetesters.com info@valuetesters.com

1 Safety and the environment

Avoiding electrical hazards

> Never use the instrument and connected probes to measure on or near live parts!

> Damaged mains cables must only be replaced by authorized personnel.

> Only have the transmitter wired and connected by authorized personnel with the voltage disconnected.

> You must always comply with the regulations applicable in your country for opening and repairing electrical equipment.

Avoiding personal injury and damage to equipment

> Installation, setting and calibration work must only be carried out by qualified and authorized personnel!

> Only open the instrument when this is expressly described in the instruction manual for installation, maintenance or repair purposes.

> Observe the permissible storage, transport and operating temperature.

> Do not store the product together with solvents. Do not use any desiccants.

> Do not use the instrument for control purposes at the same time as operating or servicing the transmitter.

> Only operate the product properly, for its intended purpose and within the parameters specified in the technical data. Do not use any force.

> Carry out only the maintenance and repair work on this instrument that is described in the documentation. Follow the prescribed steps exactly. Use only original spare parts from Testo.

Any additional work must only be carried out by authorized personnel. Otherwise testo will not accept any responsibility for the proper functioning of the instrument after repair and for the validity of certifications.

Find Quality Products Online at: Valuetesters.com info@valuetesters.com

Protecting the environment

> At the end of its useful life, send the product to the separate collection for electric and electronic devices (observe local regulations) or return the product to Testo for disposal.

2 About this document

Use

> Please read this documentation through carefully and familiarize yourself with the product before putting it to use. Pay particular attention to the safety instructions and warning advice in order to prevent injuries and damage to the products.

> Keep this document to hand so that you can refer to it when necessary.

> Hand this documentation on to any subsequent users of the product.

⚠ **WARNING**	Indicates potential serious injuries
⚠ **CAUTION**	indicates potential minor injuries

Symbols and writing standards

Representa-tion	Explanation
ℹ	Note: Basic or further information.
1. ... 2. ...	Action: more steps, the sequence must be followed.
> ...	Action: a step or an optional step.
- ...	Result of an action.
Menu	Elements of the program interface.
[OK]	Buttons of the program interface.
... | ...	Functions/paths within a menu.
"..."	Example entries

Find Quality Products Online at: Valuetesters.com info@valuetesters.com

3 Contents

1 Safety and the environment 3

2 About this document 4

3 Contents 5

4 Transmitter 7

4.1. Specifications 7

4.1.1. Functions and use 7
4.1.2. Scope of delivery 7
4.1.3. Accessories 8
4.1.4. Technical data 8
4.1.5. Dimensions 12

4.2. Product description 13

4.2.1. At a glance 13
4.2.2. Usable probes 14
4.2.3. Display and keypad 15
4.2.4. Service interface 15
4.2.5. Relay board (option) 15
4.2.6. Analog outputs 16
4.2.7. Parameters 16
4.2.8. Scaling 17
4.2.9. Alarm handling 20

4.3. Commissioning 21

4.3.1. Inserting Ethernet module (order no. 0554 6656) 21
4.3.2. Assembling the instrument 23
4.3.2.1. Wall mounting (for testo 6611, 6613, 6614, 6615, 6617 probes) 23
4.3.2.2. Duct mounting (for testo 6612 probes) 24
4.3.3. Connecting the instrument 25
4.3.3.1. Overview of terminals 27
4.3.3.2. Connecting voltage supply and analog outputs 28
4.3.3.3. Connecting the relay outputs 29
4.3.3.4. Plug-in connection option 32
4.3.3.5. Creating the PE/earthing terminal 33
4.3.3.6. Setting the Ethernet module 34
4.3.3.7. Closing the instrument 36
4.3.4. Ethernet communication 37
4.3.4.1. Types of operation 37
4.3.4.2. Mains connection 37
4.3.4.3. LED status displays 38
4.3.4.4. testo 6381 as Saveris subscriber 38
4.3.4.5. Integration into customer's Ethernet system 39
4.3.4.6. Adjusting the instrument 49
4.3.4.7. Overview: Adjustment keys and test contacts 50

Find Quality Products Online at: Valuetesters.com info@valuetesters.com

4.3.4.8. 1-point adjustment (offset - humidity/temperature) 51
4.3.4.9. 2-point adjustment (humidity/temperature) 53
4.3.4.10. Analog output adjustment 55
4.3.4.11. n-point adjustment (pressure) 56
4.3.4.12. High-humidity adjustment for testo 6614 57
4.3.4.13. Self adjustment of testo 6615 trace humidity probe 58
4.4. Operation 60
4.4.1. Relationship between user menu and mini-DIN socket is active 60
4.4.2. Key cover 60
4.4.3. Password protection 61
4.4.4. Structure of user menu 61
4.4.5. Overview of the testo 6381 user menu 63
4.4.6. The individual main menus 66
4.4.6.1. Editing main menu of channel 1 66
4.4.6.2. Editing Main Menu Channel 2 (if this option is available) 66
4.4.6.3. Editing Main Menu Channel 3 (if this option is available) 67
4.4.6.4. Editing Main Menu Alarm 67
4.4.6.5. Editing Main Menu Settings 69
4.4.6.6. Editing Main Menu Analysis 73
4.4.6.7. Editing Message main menu 75
4.4.6.8. Calling up Main Menu Ident 76
4.4.6.9. Editing Main Menu Adjust 76
4.4.6.10. Editing Reset main menu 79
4.5. Status, warning and error messages 79
4.5.1. Status messages 80
4.5.2. Warning messages 81
4.5.3. Transmitter error messages 83
4.5.4. Handling alarm messages 84
4.5.5. Namur fault conditions 86
4.6. Maintenance and cleaning 87
4.6.1. Maintaining the instrument 87
4.6.2. Cleaning the instrument 87

Find Quality Products Online at: Valuetesters.com info@valuetesters.com

4 Transmitter

4.1. Specifications

4.1.1. Functions and use

The testo 6381 transmitter with Ethernet module is used together with the plug-in, adjusted probes from the testo 6610 family.

Please refer to volume 2, testo 6610 probes, page 93 for information about commissioning, operating and maintaining the testo 6610 probe.

The testo 6381 transmitter is suitable for the following applications with Ethernet networking, amongst others:

- Clean rooms
- Test benches
- Drying processes
- Filling processes
- Painting systems
- Monitoring flow velocities or volumetric flow rates in air conditioning systems

In addition to the signal transmission of the readings to a control unit via analog outputs, the measurement data can simultaneously be recorded, documented and visualized via Ethernet. Furthermore, it is possible to issue an alarm for those responsible for the process, if necessary.

4.1.2. Scope of delivery

The scope of delivery of the testo 6381 transmitter includes the following:

- Key cover
- Rear panel bracket
- Ethernet module
- Instruction manual
- Calibration report
- CD-ROM with operating instructions (PDF), configuration files for Ethernet module and P2A update (this can only be used in conjunction with the P2A software, which has to be ordered separately).

Find Quality Products Online at: Valuetesters.com info@valuetesters.com

4.1.3. Accessories

The following accessories are available for the testo 6381 transmitter, amongst others:

- Protection caps for probes
- Mains unit
- P2A software (parameterizing, adjusting and analyzing software)
- Assembly accessories

Information about accessories and their order numbers can be found in volume 2, **Accessories and spare parts** or on the website at www.testo.com.

4.1.4. Technical data

Parameters

- Differential pressure
- Humidity (various variables and units)
- Temperature (°C/°F)

Differential pressure accuracy

The specifications are only valid if the positive pressure is applied at the positive pressure connection.

- 0.5 % of measuring range, additional 0.3 Pa intrinsic error [1]
- $T_{K\ slope\ drift}$ = 0.03 % of measuring range per degree Kelvin of deviation from nominal temperature 22 °C
- $T_{K\ zeroing\ drift}$= 0 %, as zeroing with solenoid valve[2]

[1] Measuring uncertainty in accordance with GUM: ±0.8 % of measuring range final value ±0.3 Pa.
GUM (Guide to the Expression of Uncertainty in Measurement): ISO guideline for determining the measuring uncertainty in order to render global measurement results comparable.

The following uncertainties are used during the inquiry:

- Hysteresis
- Linearity
- Reproducibility
- Adjustment area/factory calibration
- Test location

Find Quality Products Online at: Valuetesters.com info@valuetesters.com

Humidity and temperature accuracy

- Depends on probe

Pressure measuring range, resolution and overload of differential pressure

Pressure measuring range depending on version ordered	Resolution	Overload
0 to 50 Pa	0.1 Pa	20,000 Pa
0 to 50 Pa	0.1 Pa	20,000 Pa
0 to 100 Pa	0.1 Pa	20,000 Pa
0 to 500 Pa	0.1 Pa	20,000 Pa
0 to 10 hPa	0.01 hPa	200 hPa
0 to 50 hPa	0.01 hPa	750 hPa
0 to 100 hPa	0.1 hPa	750 hPa
0 to 500 hPa	0.1 hPa	2500 hPa
0 to 1000 hPa	1 hPa	2500 hPa
-10 to 10 Pa	0.1 Pa	20,000 Pa
-50 to 50 Pa	0.1 Pa	20,000 Pa
-100 to 100 Pa	0.1 Pa	20,000 Pa
-500 to 500 Pa	0.1 Pa	20,000 Pa
-10 to 10 hPa	0.01 hPa	200 hPa
-50 to 50 hPa	0.01 hPa	750 hPa
-100 to 100 hPa	0.1 hPa	750 hPa
-500 to 500 hPa	0.1 hPa	2500 hPa
-1000 to 1000 hPa	1 hPa	2500 hPa

Upon delivery and following a factory reset the readings are shown in the display in the unit that was ordered via the KMAT option Fxx, see Ordering options for 6381 transmitter (0555 6381), page 165.

Humidity and temperature measuring range

- Depends on probe

[2] Minor mixtures of the media may occur at the positive and negative pressure side due to the automatic zeroing cycle.

Find Quality Products Online at: Valuetesters.com info@valuetesters.com

Humidity and temperature resolution

- 0.1 % RH or 0.01 °C/0.01 °F

Meas. cycle

- 1/sec

Interface

- Mini-DIN for P2A software (parameterizing and adjusting software) and handheld testo 400/650

Voltage supply

- 4-wire (separate signal and supply lines): 20 to 30 V AC/DC, 300 mA power consumption

Maximum load

- 4-wire: 500 Ω (power output)

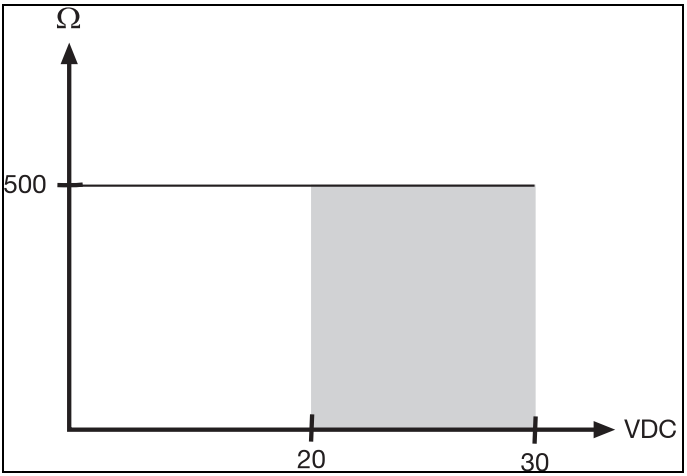

Maximal load

- 4-wire: 10 kΩ (voltage output)

Analog output

- 0 to 1 V ± 1.5 mV (4-wire) or
- 0 to 5 V ± 7.5 mV (4-wire) or
- 0 to 10 V ± 15 mV (4-wire) or
- 0 to 20 mA ± 0.03 mA (4-wire) or

Find Quality Products Online at: Valuetesters.com info@valuetesters.com

- 4 to 20 mA ± 0.03 mA (4-wire)

Resolution of analog output

- 12 bit

Relay

- 4 relays, 250 V AC/DC, 3 A (optional)

Display

- 2-line LCD with plain text line (optional)

Operating temperature

- -5 to 50 °C/23 to 122 °F

Storage temperature

- -20 to 60 °C/-4 to +140 °F

Process temperature

- -20 to 65 °C/-4 to 149 °F

Oper. humidity

- 0 to 90 % RH

Housing, weight

- Metal: 1.960 kg
- Ethernet module: 0.610 kg

Protection class

- IP 65 only if the transmitter is wired properly (closed cable entries), Ethernet connector, Harting PushPull connector and humidity probe are inserted and/or sealing plugs are inserted.

Directives, standards and tests

- EC Directive: 2004/108/EC
- DIN 14644-4
- EN 61000-6-2 interference immunity
- EN 61000-6-3 interference emission
- EN 61326-1+A1+A2

Find Quality Products Online at: Valuetesters.com info@valuetesters.com

Ethernet module

- Interface:
  - 1 x mini-DIN
  - 1 x RJ45 (Ethernet 10 BaseT/100 BaseTX)
- LED:

  2 x green

Warranty

- Duration: 2 years
- Warranty conditions: see website www.testo.com/warranty

4.1.5. Dimensions

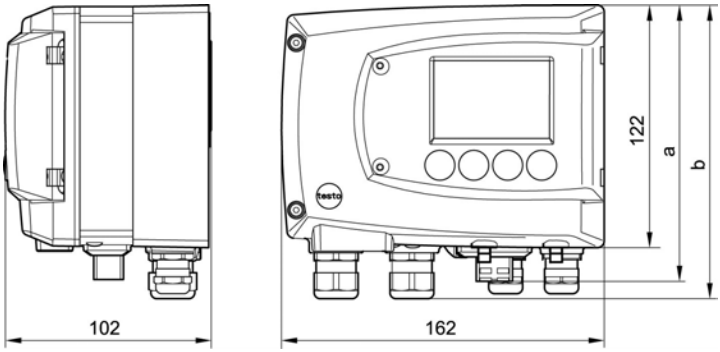

Dimensions in mm	a	b
with M20 cable couplings	144	147
With NPT cable coupling	144	144
With M plug-in connection	143	

Find Quality Products Online at: Valuetesters.com info@valuetesters.com

4.2. Product description

4.2.1. At a glance

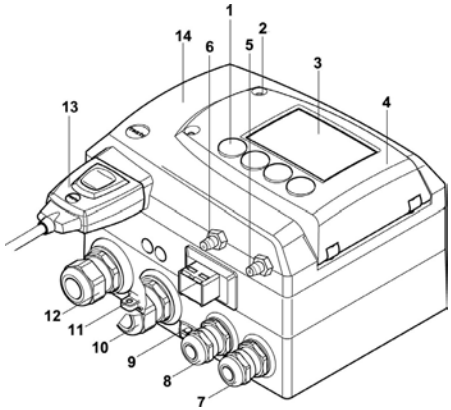

1 Keys (only with optional display)

2 Service flap screw connection (self-locking, 2 pcs.)

3 Display (optional)

4 Service flap

5 Negative pressure connection

6 Positive pressure connection, marked with a red washer

7 M 16 x 1.5 screw connection*, e.g. analog outputs

8 M 16 x 1.5 screw connection*, e.g. voltage supply

9 Earthing/PE connection

10 M 20 x 1.5 screw connection*, e.g. R3 and R4 relays

11 Eyelet for measuring point panel

12 M 20 x 1.5 screw connection*, e.g. R1 and R2 relays

13 Probe connector (testo 6610)

14 Upper part of housing

* Alternatively, NPT cable couplings or M plug-in connections are available

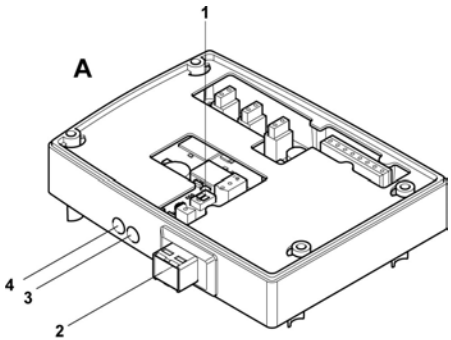

A Ethernet module

1 DIP switch

2 Ethernet port

3 LED: LAN connection status

4 LED: Supply

Find Quality Products Online at: Valuetesters.com info@valuetesters.com

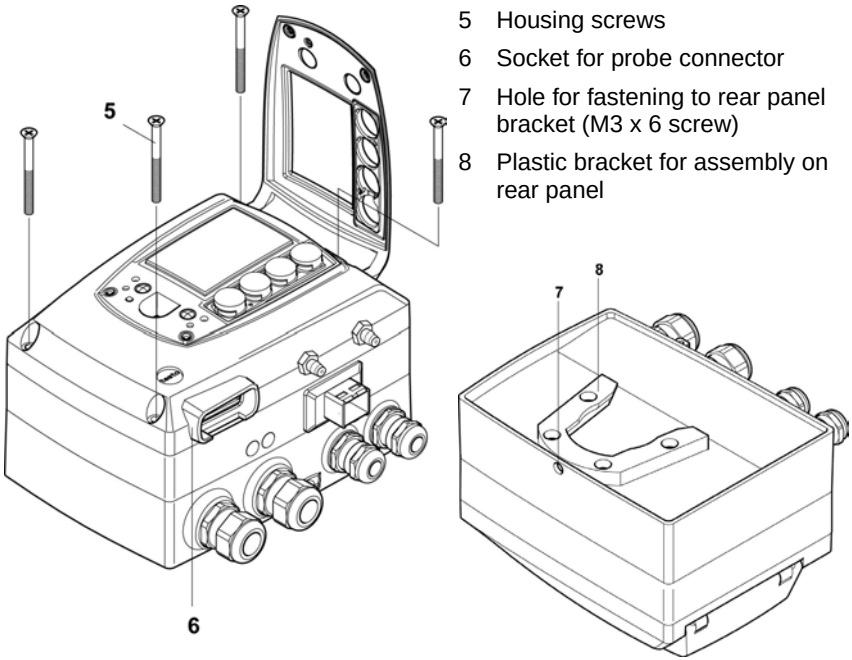

5 Housing screws

6 Socket for probe connector

7 Hole for fastening to rear panel bracket (M3 x 6 screw)

8 Plastic bracket for assembly on rear panel

4.2.2. Usable probes

The testo 6381 transmitter can be used with the following probes:

Probes	Article no.	Characteristic
testo 6611	0555 6610-L11	**Wall** probe version; accuracy to ±1 % RH; temperature range -20 to +70 °C/-4 to +158 °F, sensor plugged in
testo 6612	0555 6610-L12	**Duct** probe version; accuracy to ±1 % RH; temperature range -30 to +150 °C/ -22 to +302 °F, sensor soldered
testo 6613	0555 6610-L13	**Cable** probe version; accuracy to ±1 % RH; temperature range -40 to +180 °C/ -40 to +356 °F, sensor soldered
testo 6614	0555 6610-L14	**Heated cable** probe version; accuracy to ±1.0 % RH; temperature range -40 to +180 °C/ -40 to +356 °F, sensor soldered

Find Quality Products Online at: Valuetesters.com info@valuetesters.com

Probes	Article no.	Characteristic
testo 6615	0555 6610-L15	**Trace humidity cable** probe version; accuracy ±1 K at 0 °Ctd/+32 °Ftd; temperature range -40 to 120 °C/-40 to +248 °F, sensor soldered
testo 6617	0555 6610-L17	**Cable with cover electrode monitoring** probe version; accuracy to ± 1.2 % RH; temperature range -40 to 180 °C/ -40 to +356 °F, sensor soldered

4.2.3. Display and keypad

The display option allows operation of the testo 6381 transmitter via the display and four keys.

The LCD display consists of two 7-segment lines for displaying readings and units and of an information line (for status messages, for example).

The brightness and contrast of the display and the background lighting (permanent or off) can be changed via the user menu or the P2A software.

4.2.4. Service interface

The parameterizing socket (mini-DIN) is located behind the service flap as an interface to the P2A software or Testo handheld instrument (testo 400/testo 650).

4.2.5. Relay board (option)

This has a floating switch capacity of 250 V AC/3 A. The switching limits and hysteresis as well as the function as relay for the collective alarm can be set via the display or the P2A software.

Further features include:

- Function of changeover contacts (NC/NO contacts) freely selectable
- 12 terminals for a total of 4 relays.

If no relays are available, settings for monitoring limit values or alarms can still be controlled via the display. The alarm status will be shown on the display.

Only have the transmitter wired and connected by authorized personnel with the voltage disconnected.

Find Quality Products Online at: Valuetesters.com info@valuetesters.com

4.2.6. Analog outputs

As analog outputs, the testo 6381 has either

- 1 or optionally 3 current outputs of 0 to 20 mA (4-wire)/4 to 20 mA (4-wire) or
- 1 or optionally 3 voltage outputs of 0 to 1 V/0 to 5 V/0 to 10 V (4-wire).

The transmitter can be ordered with three analog outputs as an option.

The optional three channels are galvanically isolated.

4.2.7. Parameters

The following parameters are displayed

- Differential pressure in Pa, hPa, kPa, mbar, bar, mmH_2O, kg/cm^2, PSI, inch HG, inch H_2O
- Volumetric flow rate[3] in m^3/h, l/min, Nm^3/h, Nl/min
- Flow[4] in m/s, ft/min
- Relative humidity in % RH (technical)
- Relative humidity in % WMO* (calculation according to the WMO standard)
- Degree of humidity in g/kg and gr/lb
- Absolute humidity in g/m³ and gr/ft³
- Water content in ppm (vol) and % vol
- Psychrometer temperature in °C_{tw} and °F_{tw}
- Enthalpy in kJ/kg and BTU/lb
- Water vapour partial pressure in hPa and H_2O
- Dewpoint temperature in °C_{td} and °F_{td}
- Standardized dewpoint in °C_{tdA} , standardized at atmospheric pressure (1013 hPa); precondition: Absolute process pressure.

* It is possible that condensation appears as of a displayed humidity starting from 70 % and is shown on the display. This unit is used in meteorology, amongst others. When calculating

[3] Calculated

[4] To prevent fluctuating flow rate values at the zero point (depressurized), the flow rate values are only calculated as of differential pressures > 0.2 Pa or > 0.1 % of the respective measuring range (whichever is the greater). With smaller differential pressures, the flow rate value remains at 0.00 m/s.

Find Quality Products Online at: Valuetesters.com info@valuetesters.com

the relative humidity the Magnus coefficient with undercooled water is used in accordance with WMO.

> Calculated humidity variables correspond to the medium of air. With other gases/gas compositions, deviations may occur, e.g. with the enthalpy.

- Dewpoint of H_2O_2 mixture in °C_{tm} and °F_{tm}
- Temperature °C and °F

4.2.8. Scaling

There are three types of min./max. values:

1 The measuring range: The maximum sensor performance is in this range. Values outside of the measuring range are displayed via messages, for example. Measuring range, see table (below).

2 Standard scaling: The output signals are assigned to this measuring range as standard:

- during delivery if no entries are made in the order code
- after exchanging the unit, the measuring range recorded in the instrument is applied as standard.

> The transmitter even retains its scaling with the voltage disconnected.

Measuring range, see table (below).

3 The maximum settings for the manual scaling

- The maximum limits can be calculated as follows:

  X = difference between MIN. and MAX. value of the standard scaling

  (Max. value of standard) + (50 % of X)

  (Min. value of standard) - (50 % of X)

- It is thus possible to scale beyond the measuring range, e.g. for the adjustment of the scaling limits to standard values of a PLC.

With the alarm definition, however, the physical measuring range limits are decisive.

Find Quality Products Online at: Valuetesters.com info@valuetesters.com

Measuring range/standard scaling	Maximum scaling
0 to 50 Pa	-5 to 15 Pa
0 to 50 Pa	-25 to 75 Pa
0 to 100 Pa	-50 to 150 Pa
0 to 500 Pa	-250 to 750 Pa
0 to 10 hPa	-5 to 15 hPa
0 to 50 hPa	-25 to 75 hPa
0 to 100 hPa	-50 to 150 hPa
0 to 500 hPa	-250 to 750 hPa
0 to 1000 hPa	500 to 1500 hPa
-10 to 10 Pa	-20 to 20 Pa
-50 to 50 Pa	-100 to 100 Pa
-100 to 100 Pa	-200 to 200 Pa
-500 to 500 Pa	-1000 to 1000 Pa
-10 to 10 hPa	-20 to 20 hPa
-50 to 50 hPa	-100 to 100 hPa
-100 to 100 hPa	-200 to 200 hPa
-500 to 500 hPa	-1000 to 1000 hPa
-1000 to 1000 hPa	-2000 to 2000 hPa

Parameter	Unit	Probes	Physical measuring range at 1013 hPa		Standard scaling of transmitter measuring range	
			MIN	MAX	MIN	MAX
Temperature	°C	6611	-20	+70	-20	+70
	°F	6611	-4	+158	-4	+158
	°C	6612	-30	+150	-30	+150
	°F	6612	-22	+302	-22	+302
	°C	6613, 6614, 6617	-40	+180	-40	+180

Find Quality Products Online at: Valuetesters.com info@valuetesters.com

			Physical measuring range at 1013 hPa		Standard scaling of transmitter measuring range	
	°F	6613, 6614, 6617	-40	+356	-40	+356
	°C	6615	-40	+120	-40	+120
	°F	6615	-40	+248	-40	+248
Dewpoint	$°C_{td}$	6611	-20	+70	-80	+100
	$°F_{td}$	6611	-4	+158	-112	+212
	$°C_{td}$	6612, 6613, 6614, 6617	-20	+100	-80	+100
	$°F_{td}$	6612, 6613, 6614, 6617	-4	+212	-112	+212
	$°C_{td}$	6615	-60	+30	-80	+100
	$°F_{td}$	6615	-76	+86	-112	+212
Absolute humidity	g/m^3	all probes	0	600	0	2000
	gr/ft^3	all probes	0	250	0	800
relative humidity	% RH	all probes	0	100	0	100
WMO relative humidity	% RH		0	100	0	100
Mixture dewpoint (H_2O_2)	$°C_{tm}$		-20	+100	-20	+100
	$°F_{tm}$		-4	+212	-4	+212
Degree of humidity	g/kg	all probes	0	13300	0	9500
	gr/lb	all probes	0	93000	0	66500
Enthalpy	kJ/kg		-40	99999	-40	8000
	BTU/lb		-18	43000	-18	3500
Psychrometer	$°C_{tw}$		-40	100	-40	180

Find Quality Products Online at: Valuetesters.com info@valuetesters.com

			Physical measuring range at 1013 hPa		Standard scaling of transmitter measuring range	
temperature	°F_{tw}		-58	210	-40	356
Water content	ppm (vol) H_2O		0	99999	0	99999
	% vol		0	100	0	100
Water vapour partial pressure	hPa		0	1000	0	7000
	inchH_2O		0	400	0	2800

4.2.9. Alarm handling

For upper and lower alarm limits, individual alarms as well as collective alarms can be specified. If the collective alarm function is activated, an alarm is triggered as soon as the alarm limit of an alarm is exceeded, if this alarm is assigned to the collective alarm.

The testo 6381 monitors limit values with the help of relays. If a reading is outside the limit values, a relay to be specified by the user is switched.

If the reading reverts to more than a specified hysteresis below or above the limit value, the alarm is cancelled.

In addition, information about the occurrence of error/status messages can be provided by means of a collective alarm relay, see Status, warning and error messages, page 79

> **i** If multiple alarm messages are activated at the same time, the last alarm is shown. If the alarm is cancelled again, the previous messages are no longer shown.

Find Quality Products Online at: Valuetesters.com info@valuetesters.com

4.3. Commissioning

4.3.1. Inserting Ethernet module (order no. 0554 6656)

The Ethernet module can be ordered retroactively as an accessory. It can easily be installed in the testo 6381 transmitter.

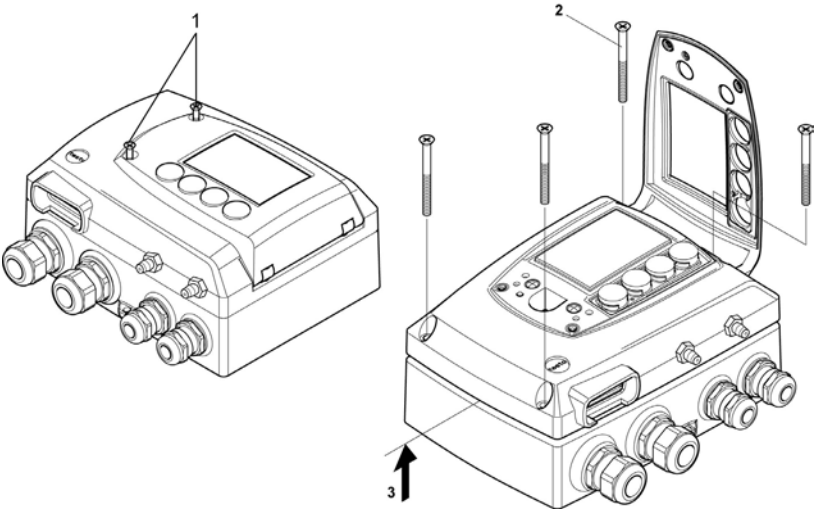

✓ The probe connector must be disconnected.

1. Loosen screw connection (**1**) of service flap and open the flap.
2. Loosen and remove housing screws (**2**).
3. Remove upper part of housing (**3**) and place on a clean surface.

Find Quality Products Online at: Valuetesters.com info@valuetesters.com

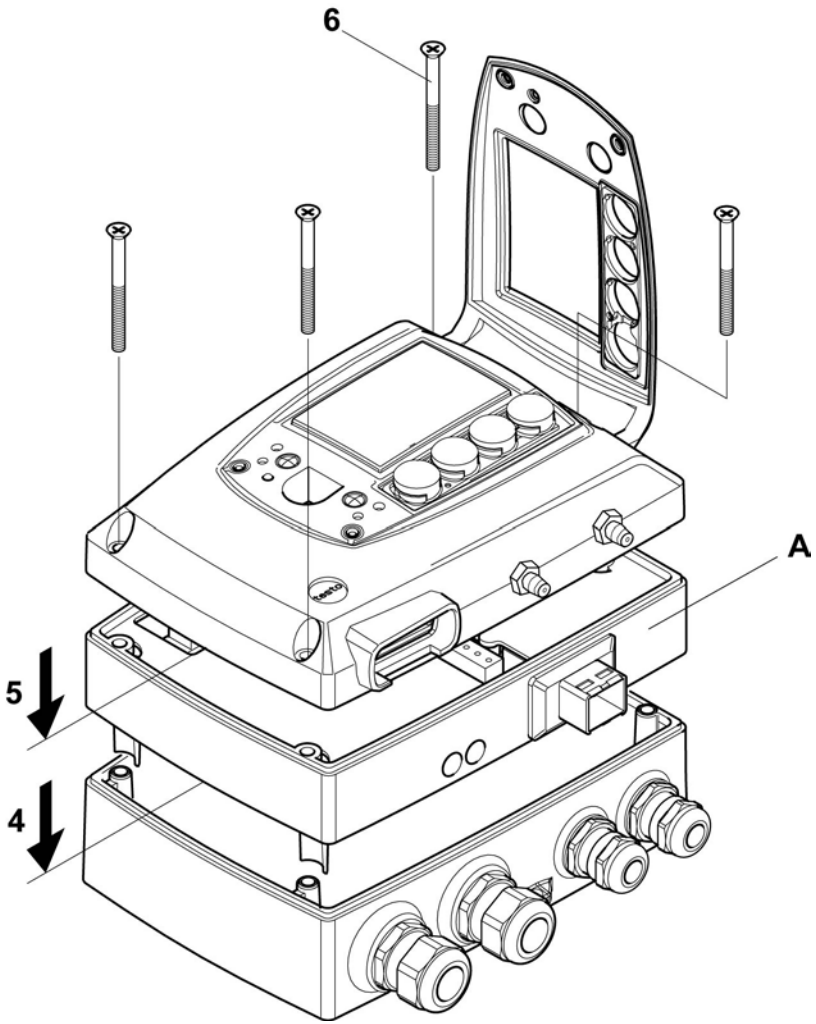

4. Place Ethernet module (**A**) on lower part of instrument (**4**).

> **i** First set the desired operating mode via the DIP switch (see Setting the Ethernet module, page 34) before fixing the instrument in place.

5. Set on upper part of instrument (**5**) and fix in place using the housing screws (**6**) provided in the accessories.

Find Quality Products Online at: Valuetesters.com info@valuetesters.com

4.3.2. Assembling the instrument

4.3.2.1. Wall mounting (for testo 6611, 6613, 6614, 6615, 6617 probes)

Attaching rear panel bracket

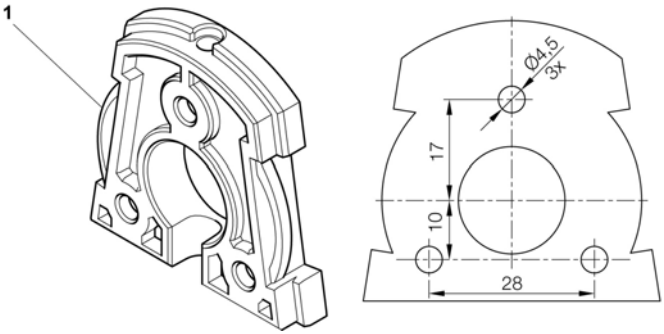

1. Remove locking screw (see item (**4**) of drawing below) and detach rear panel bracket from plastic bracket (see item (**2**) of drawing below).
2. Hold rear panel bracket in assembly position and mark the three drill holes.
3. Drill three holes (Ø 5 mm) and insert dowels where necessary.
4. Screw on rear panel bracket.

   Remember that the clamping brackets (**1**) must face the wall.

Fastening instrument to rear panel bracket

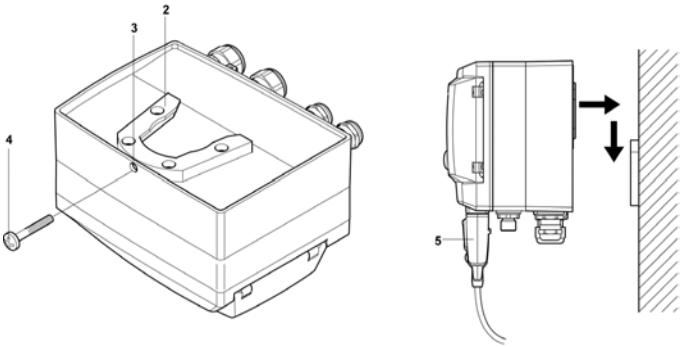

1. Slide plastic bracket (**2**) on the back of instrument onto rear panel bracket until it engages (see arrows).

Find Quality Products Online at: Valuetesters.com info@valuetesters.com

2. Insert screw (**4**) through hole (**3**) and screw into rear panel bracket.
3. Insert probe connector (**5**) into socket until it engages.

4.3.2.2. Duct mounting (for testo 6612 probes)

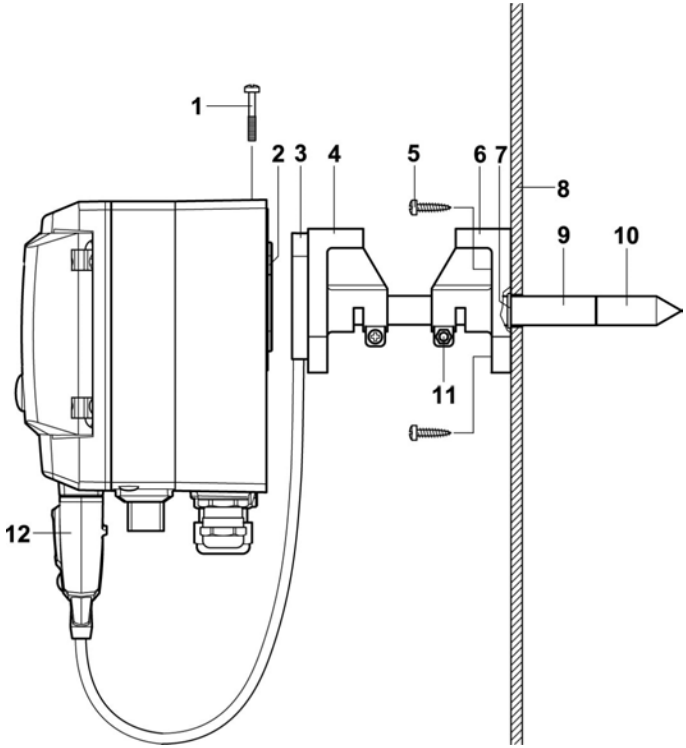

1. Hold wall/duct bracket (order no. 0554 6651) (**6**) against duct wall (**8**) and mark drill holes for wall/duct bracket and probe shaft.
2. Drill a hole (Ø 12.5 mm) in the duct wall to feed through the probe shaft.
3. Fasten wall/duct bracket (**6**) to duct wall with screws (**5**).
4. Push probe shaft (**9**) with filter (**10**) through the middle hole of the mounting bracket.

> **i** The wall/duct bracket (**6**) has an O-ring (**7**) to seal it against the duct. Feed the probe shaft (**9**) carefully through the wall/duct bracket so that the O-ring is not damaged.

Find Quality Products Online at: Valuetesters.com info@valuetesters.com

5. Fix the correct position of the probe shaft (**9**) with screw (**11**) and mark (insert probe shaft as far as possible).
6. Slide plastic bracket (**2**) on the back of the transmitter onto bracket (**3**, **4**) until it engages.

> Take the weight of the transmitter into account. Ensure that the brackets (**4**, **6**) are fastened securely.

7. Insert screw (**1**) through the hole on the top of the instrument and screw into bracket (**3**).
8. Insert probe connector (**12**) into socket until it engages.

4.3.3. Connecting the instrument

Opening the instrument

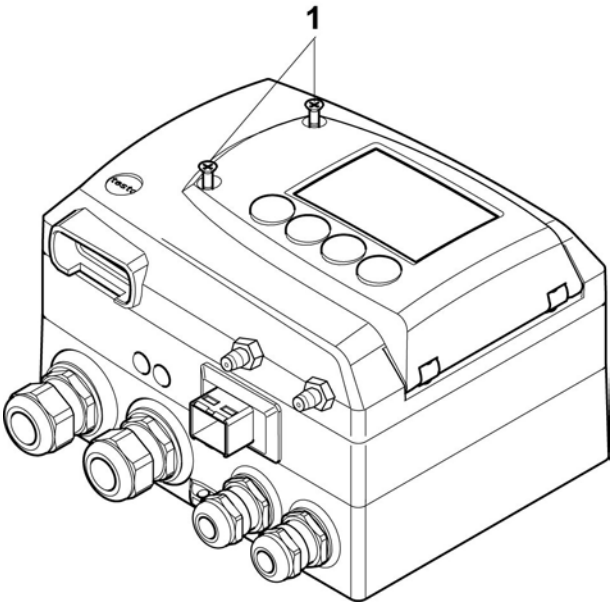

1. Loosen screw connection (**1**) of service flap and open the flap.

Find Quality Products Online at: Valuetesters.com info@valuetesters.com

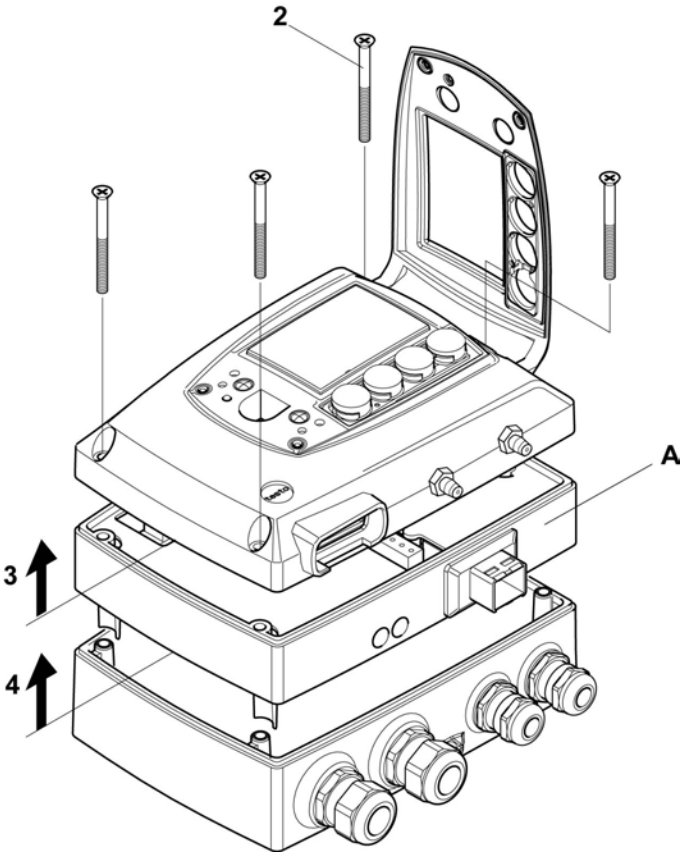

2. Loosen and remove housing screws (**2**).

> The Ethernet module (**A**) is already detached from the upper and lower parts of the housing by removing the housing screws (**2**).

3. Remove upper part of housing (**3**) and place on a clean surface.
4. Remove Ethernet module (**A**) from lower part of housing (**4**) and also place on a clean surface.

Find Quality Products Online at: Valuetesters.com info@valuetesters.com

WARNING

Electrical voltage

Danger of injury!

> De-energize the mains connection before connecting the transmitter.

Only have the transmitter wired and connected by authorized personnel with the voltage disconnected.

4.3.3.1. Overview of terminals

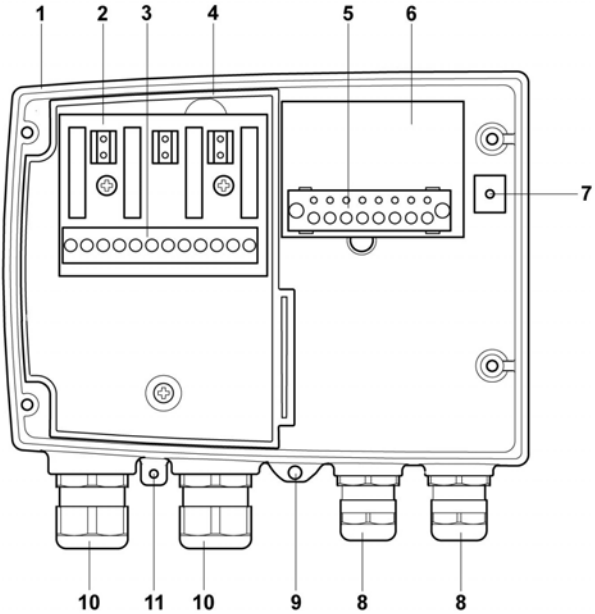

1	Lower part of housing	7	Earthing terminal (internal)
2	Relay board (option)	8	M 16 x 1.5 screw connection*
3	Relay terminals	9	Earthing terminal (external)
4	Insulating trough for relay board	10	M 20 x 1.5 screw connection*
5	Terminal strip for voltage supply and analog outputs	11	Eyelet for measuring point panel
6	Terminal board		* Alternatively, NPT cable coupling or M plug-in connection

Find Quality Products Online at: Valuetesters.com info@valuetesters.com

The following description of the terminals refer to this overview and its numbering.

4.3.3.2. Connecting voltage supply and analog outputs

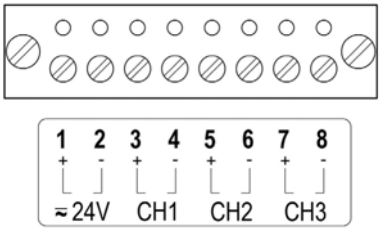

Terminal strip for voltage supply and analog outputs, item (**5**) of overview of terminals, page 27

1. Feed cable with voltage supply and analog signal lines through opened M 16 x 1.5 screw connection (item (**8**) in the overview of terminals, page 27).
2. Strip the cable ends, clamp wire end ferrules on and screw down onto voltage terminals.
3. Close M 16 x 1.5 screw connection (item (**8**) in the overview of terminals, page 27).

Wiring diagram for 4-wire system (0 to 20 mA/4 to 20 mA/0 to 1 V/0 to 5 V/0 to 10 V)

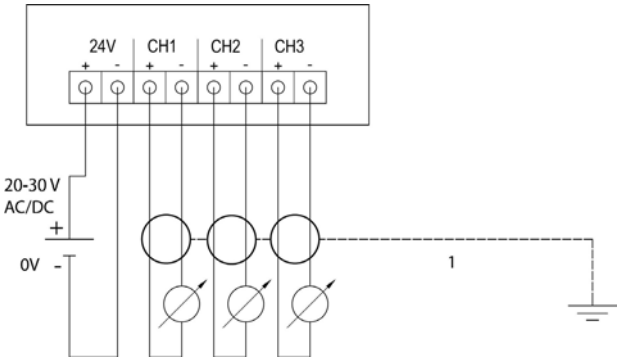

1 1 or 3 channels, 0 to 20 mA/4 to 20 mA max. load per 500 Ω 0 to 1 V/0 to 5 V / 0 to 10 V

Requirement for the connecting cable of the supply:

- Insulated with cross-section of at least 0.25 mm², maximum 2.7 mm² without wire end sleeves.
- The supply line must be secured against exceeding 0.5 A.
- An OFF switch must be installed in an easily accessible position close by and be marked as such.

Find Quality Products Online at: Valuetesters.com info@valuetesters.com

1. Feed connection cables of the one, or optionally three, channels through opened M 16 x 1.5 screw connection (item (**8**) in the overview of terminals, page 27).
2. Strip the cable ends, clamp wire end ferrules on and screw to channel terminals as shown in diagram.
3. Close M 16 x 1.5 screw connection (item (**8**) in the overview of terminals, page 27).

4.3.3.3. Connecting the relay outputs

Only have the transmitter wired and connected by authorized personnel with the voltage disconnected.

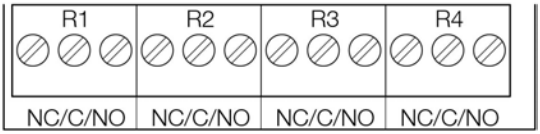

Relay terminal strip, item (**3**) of overview of terminals

There is the option of twelve terminals for a total of four relays. The designations NC/C/NO (normally closed contact/root or pin/normally open contact) are etched on the surface of the board.

Using PG screw connection

1. Feed connection cables for the relays through opened M 20 x 1.5 screw connection (item (**10**) of overview of terminals).
2. Strip cable ends and clamp on wire end ferrules.
3. Connect relays according to chosen function (NC/NO) (see diagrams below; relay 1 is shown as an example of a connection).

Using plug-in connections (optional)

Only insert or disconnect the plug-in connection when the voltage is disconnected.

4. Clean the connector of the probe line and the coupling of any foreign matter.

Do not disconnect the connector of the probe line from the instrument for extended periods to protect against contamination.

Find Quality Products Online at: Valuetesters.com info@valuetesters.com

Connection note

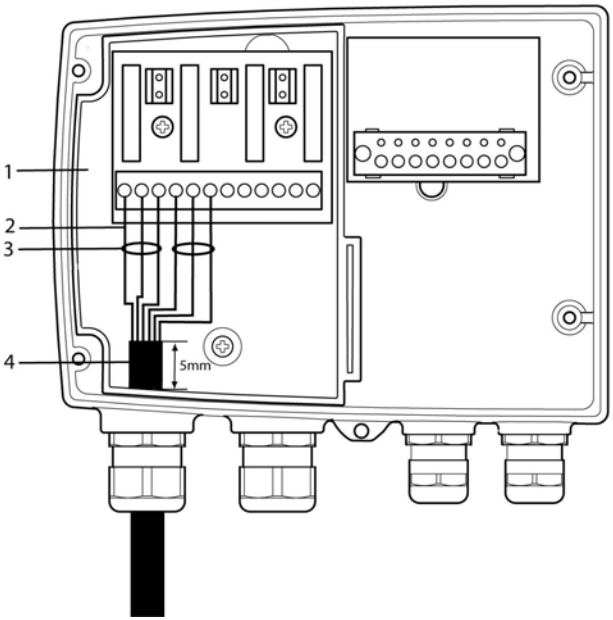

- For the connection, a double-insulated mains cable (sheathed cable) with a cross-section of at least 1.5 mm² must be used.
- Cable connection (**2**) may not be routed in a loop within the tray (**1**).
- It is recommended that you always tie 3 cores to one another using a cable tie (**3**).
- The insulation of the cable must be fed at least 5 mm (**4**) into the tray.

Find Quality Products Online at: Valuetesters.com info@valuetesters.com

Use of relay as NC contact (NC = normally closed)

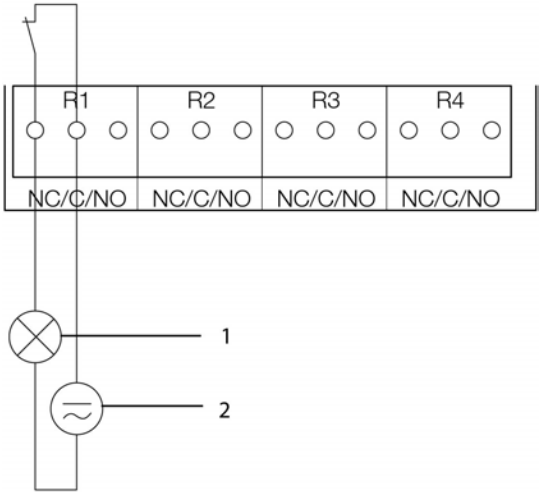

1 Alarm/status light (example of installation)

2 250 V AC/DC, 3 A

The busy light (alarm/status light) is permanently on until the relay opens or the circuit is interrupted. This circuit can therefore be used to monitor the functionality of the alarm circuit, as a cable break, for instance, is indicated by the busy light going off.

Use of relay as NO contact (NO = normally open)

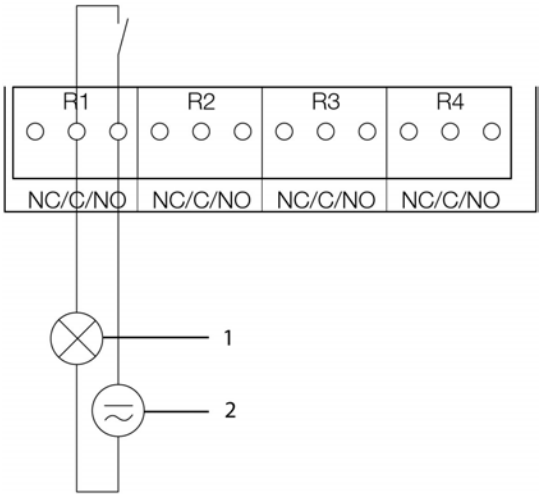

1 Alarm/status light (example of installation)

2 250 V AC/DC, 3 A

Find Quality Products Online at: Valuetesters.com info@valuetesters.com

> **i** The busy light (alarm/status light) only comes on when the relay is switched (closed). Monitoring the functionality of the alarm circuit is therefore not possible with this switching operation.

5. Close M 20 x 1.5 screw connection (item (**10**) in overview of terminals).

4.3.3.4. Plug-in connection option

As an option, the PG screw connections of the signal and supply lines can be replaced with plug-in connections that are installed at the housing, see item 1 and 2. The relay cabling occurs via standard cable entries and PG screw connections, see item 3 and 4.

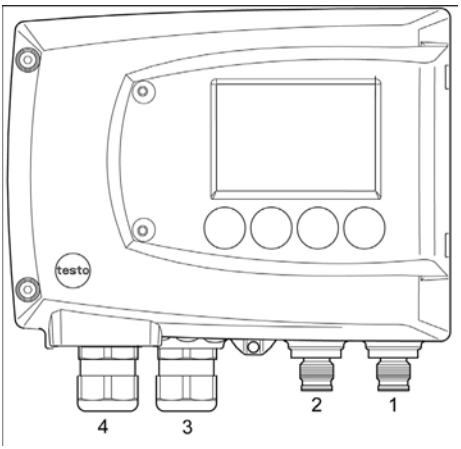

Transmitter housing

Plug-in connections for power supply and channels

M12 plug-in connection (5-pin) socket (item **1**)

View of the plug-in connections in the installed state from outside

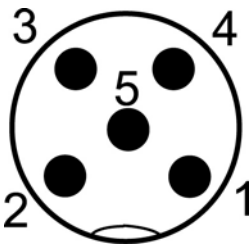

PIN	Assignment
1	V 24-
2	V 24+
3	+ Ch1
4	- Ch1
5	PE

Find Quality Products Online at: Valuetesters.com info@valuetesters.com

M12 plug-in connection (5-pin) connector (item **2**)

PIN	Assignment
1	- Ch2
2	+ Ch2
3	+ Ch3
4	- Ch3
5	PE

4.3.3.5. Creating the PE/earthing terminal

As the testo 6381 has a metal housing, we recommend that the instrument be earthed. This can be done using the earthing terminal within the instrument (**1**) or the earthing terminal outside of the instrument (**2**).

Only use the external earthing terminal in dry interiors.

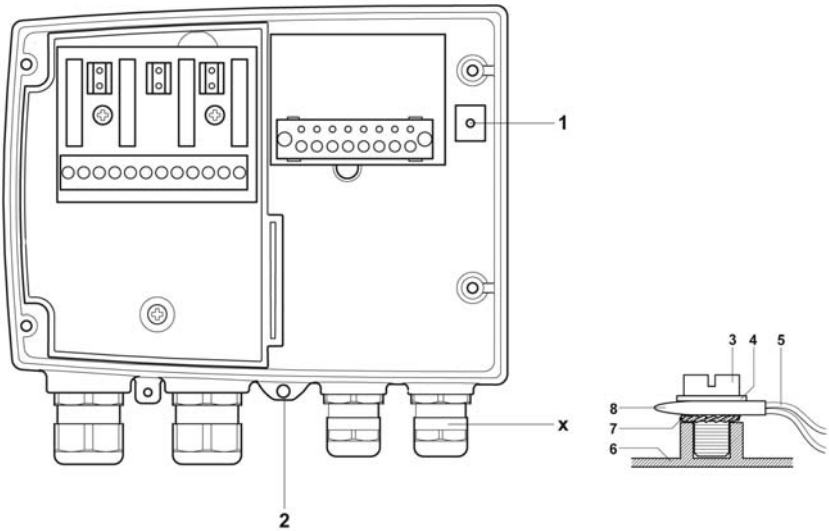

Using the earthing terminal within the instrument

1. Guide shielded cable (**5**) through the cable coupling (**x**) and fit cable lug (**8**). Fix this to the side of the instrument (**6**) using M 5 screw (**3**), washer (**4**) and snap ring (**7**) on the internal earthing terminal (**1**).

Find Quality Products Online at: Valuetesters.com info@valuetesters.com

2. Place the other cable end on an appropriate functional earth, e.g. an earthing bar.

Using an earthing terminal outside of the instrument

1. Use PE line (yellow-green) (**5**) with cable lug (**8**). Fix this using M 5 screw (**3**), washer (**4**) and snap ring (**7**) on the external earthing terminal (**2**).
2. Place the other cable end on an appropriate functional earth, e.g. an earthing bar.

4.3.3.6. Setting the Ethernet module

Using a DIP switch the Ethernet module can be switched between two main functions:

- Saveris subscriber function (DIP switch no. 1 = on, DIP switch no. 2 = on), testo 6381 is used as a testo Saveris component.
- XML server function (DIP switch no. 1 = off, DIP switch no. 2 = on), integration of the testo 6381 into the customer's Ethernet system.

In the condition on delivery, the switch position is set to on (Saveris mode) with the testo 6381 with Ethernet module.

✓ The testo 6381 must be separated from the Ethernet network.

1. Open transmitter (see Opening the instrument, page 25).

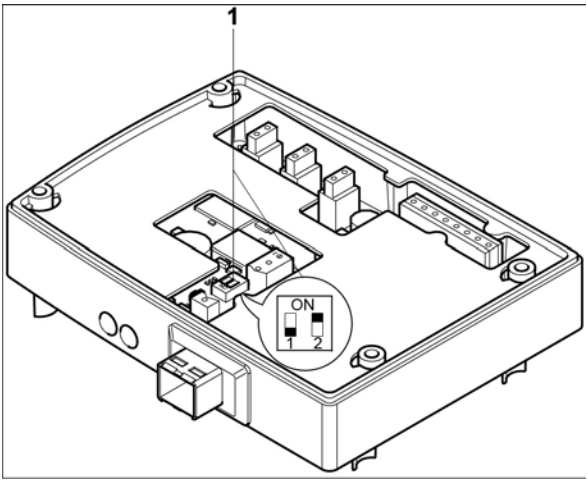

Find Quality Products Online at: Valuetesters.com info@valuetesters.com

2. Set DIP switch no. 1 (**1**) at Ethernet module. In the picture: DIP switch no. 1 off, DIP switch no. 2 on[5]
3. Set Ethernet module on lower part of housing (see arrow).

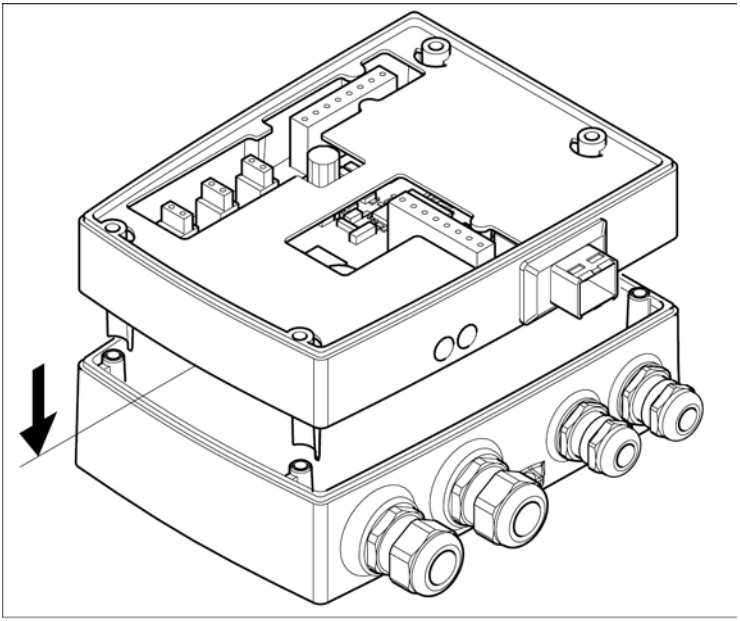

4. For the configuration of the Ethernet module, see following chapter.
5. If you do not wish to perform a configuration, close the transmitter.

[5] DIP switch no. 2 non-functional

Find Quality Products Online at: Valuetesters.com info@valuetesters.com

4.3.3.7. Closing the instrument

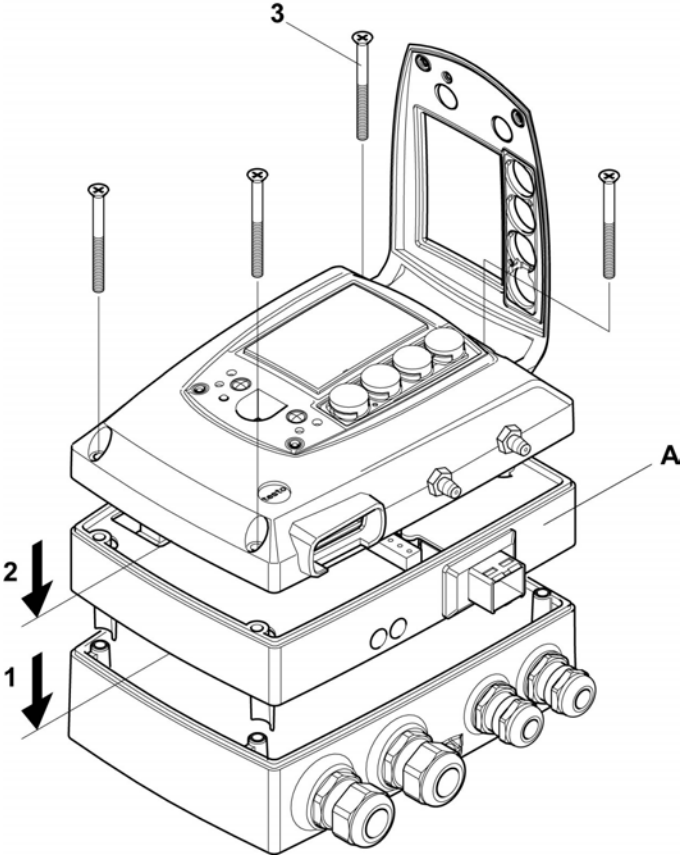

1. Place Ethernet module (**A**) on lower part of instrument (**1**).
2 Set on upper part of instrument (**2**) and fix in place using housing screws (**3**).

Find Quality Products Online at: Valuetesters.com info@valuetesters.com

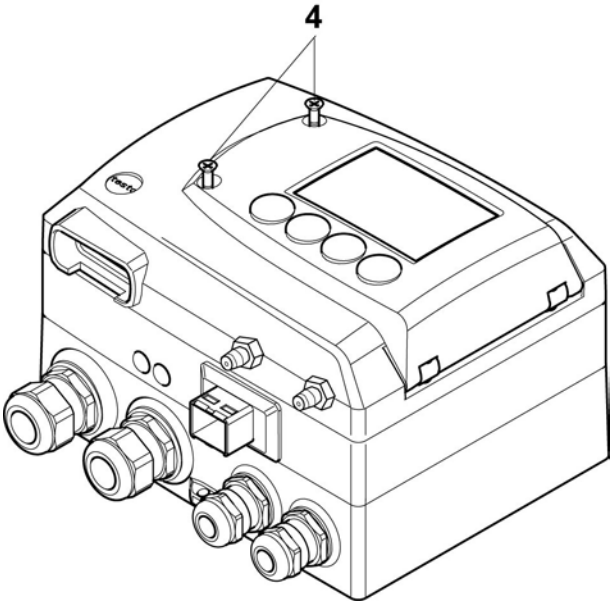

3. Close the service flap and tighten screws (**4**).

4 Connect Ethernet network cable to the transmitter via the Ethernet jack.

4.3.4. Ethernet communication

4.3.4.1. Types of operation

In general, the Ethernet module performs two functions:

- a corresponding testo 6381 becomes a Saveris subscriber
- a corresponding testo 6381 can be integrated into any Ethernet systems

4.3.4.2. Mains connection

> Connect the network cable to the transmitter.

The network cable must not be connected directly to the telephone network (ISDN).

In order to ensure the IP protection class, an RJ 2.5 Harting PushPull connector must be used.

Find Quality Products Online at: Valuetesters.com info@valuetesters.com

4.3.4.3. LED status displays

Characteristic	LED 1	LED 2
Colour	green	green
Status display for	Voltage supply	LAN connection
Status: off	No voltage supply	No LAN connection
Status: lights up	Voltage supply present	LAN connection present
Status: flashes		Data transfer

4.3.4.4. testo 6381 as Saveris subscriber

Setting the IP address

✓ Upper part of housing must be removed.

✓ Network cable must be connected to the Saveris base and to the Ethernet module.

✓ Service plug must be inserted.

The IP address of the transmitter can either be set via the P2A software (transmitter accessories) or via the configuration menu of testo Saveris™ (testo Saveris™ Ethernet Wizard).

1. Set the IP address with the P2A software (see Using the software, page 131) or with the testo Saveris™ Ethernet Wizard (see instruction manual).
2. Disconnect service plug.
3. Disconnect the Ethernet module from the voltage supply.
4. Close instrument (see Closing the instrument, page 36).

Using Saveris

> Start Saveris software (see instruction manual Measurement data monitoring with testo Saveris)

Ensure that the Saveris software is not already open, for example in multi-user operation under Windows® Vista. If multiple clients are installed in a network, make sure that no simultaneous changes are made to the system configuration by the clients during simultaneous operation of the clients.

Find Quality Products Online at: Valuetesters.com info@valuetesters.com

1. **[Start]** | **All Programs** | **Testo** |

- Select **Saveris Professional Client** (full version). The entry is available if Saveris Professional Client is installed
- Select **Saveris Viewer** (limited functionality). The entry is available if Saveris Viewer is installed

- The **Testo Saveris software** program window is opened with the **Select project** dialogue.

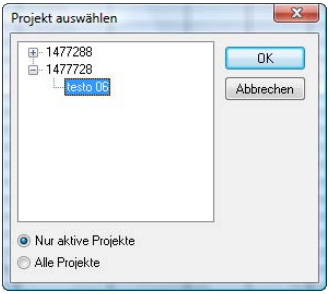

> **i** If the software will not start, check whether the **testo tdassvcs** service is started in the service management of the operating system and restart it, if needed.

2. Select the
   - **Only active projects** option if the data from a running project should be opened
   - **All projects** option if the data from a completed project should be opened.
3. Select the project that is to be opened in the tree structure.
4. Confirm with **[OK]**.

- The **Testo Saveris software** program window is shown with the selected data record in the foreground.

4.3.4.5. Integration into customer's Ethernet system

Precondition

> **i** The user should be familiar with the structure of an XML document. Furthermore, enough knowledge should be available that this type of document can be downloaded and decoded via an Internet connection with the aid of a programming/script language.

Find Quality Products Online at: Valuetesters.com info@valuetesters.com

Interface

The communication takes place according to the client/server principle, whereby the Ethernet module takes on the role of the server:

The XML interface will be approached via a URL. The URL consists of the IP address of the Ethernet module, the path for the XML document and, depending on the URL, with a clearly defined parameter. If a parameter is missing or an incorrect value is transferred, the Ethernet module sends back a simple error message.

Example:

IP address = 254.169.100.100

URL for serialnumber.xml:

http://254.169.100.100/data/getserialnumber

If a parameter is required, a "?" is always in the first place after the URL, then the parameter is transferred to the common query string form (name=value).

Example:

IP address = 254.169.100.100

URL for / identification.xml:

http://254.169.100.100/data/getidentification?param=0 (compare table xml codes)

After calling up the compound URL, if everything was correct, an XML document is returned. With faulty parameters a simple HTML answer comes that points out the reason that an XML answer could not be given.

If an XML document is to be loaded on the server, access is provided by means of a POST request

Example of an upload via the program wget:

IP address = 254.169.100.100

URL for / usersettings.xml:

Path details of the folder in which the wget program is located	Command	Path details of the folder in which the usersettings XML file is located	IP address of the transmitter and required URL (see table on the next page)
H:/wget/wget-complete-stable	/wget --post-file=	C:/usersettings.xml	254.169.100.100/config/setusersettings

Find Quality Products Online at: Valuetesters.com info@valuetesters.com

The Ethernet module supports reading out of

- Readings
- Instrument type (testo 6381)
- Firmware date and version (testo 6381)
- Status and status messages (testo 6381)
- Alarm messages (testo 6381)
- Service hour counter (testo 6381 and probe)

as well as the reading and writing of the:

- Adjustment data (testo 6381)
- Configuration data of analog outputs (testo 6381)
- Configuration data of relays (testo 6381)
- User settings (testo 6381)

XML codes (download)

The table of XML codes is available for download at www.testo.de/transmitter as well as on the product CD

URL	Description	Parameter	Answer (see Appendix)
/data/getserialnumber	Read off serial number of connected transmitter		serialnumber.xml
/data/getidentification	Read off type of connected transmitter/ probe	param=0 (for transmitter) param=1 (for probe)	identification.xml
/data/getversion	Read off firmware version of connected transmitter		version.xml
/data/getfirmwaredate	Read off firmware date of connected transmitter		firmwaredate.xml
/data/getonlinevalue	Read off online values of connected transmitter		onlinevalue.xml
/data/getviewchannels	Read off view channels of connected transmitter		viewchannels.xml
/data/getstatus	Read off status of connected transmitter		status.xml
/data/getlaststatusmessage	Read off last status message of connected transmitter		laststatusmessage.xml
/config/gethourscount	Read off service hour counter of transmitter or probe		hourscount.xml

Find Quality Products Online at: Valuetesters.com info@valuetesters.com

URL	Description	Parameter	Answer (see Appendix)
/config/getusersettings	Read off settings of transmitter		usersettings.xml
/config/getcalibration	Read off adjustment data of transmitter	param=0 (adjustment set 1) param=1 (adjustment set 2) param=2 (adjustment set 3)	calibration.xml
/config/getreldefinition	Read off relay information of transmitter	param=0 (relay 1) param=1 (relay 2) param=2 (relay 3) param=3 (relay 4)	reldefinition.xml
/config/getheatertime	Read off sensor heating information		heatertime.xml
/config/getoptions	Read off options of transmitter		options.xml
/config/getcollectivealarm	Read off alarm messages of transmitter		collectivealarm.xml

Upload XML documents

URL	Description	Parameter	Post	Answer (see Appendix)
/config/setusersettings	Perform settings of transmitter		usersettings.xml	usersettings.xml
/config/setcalibration	Set adjustment data of transmitter	param=0 (adjustment set 1) param=1 (adjustment set 2) param=2 (adjustment set 3)	calibration.xml	calibration.xml
/config/setreldefinition	Set relay information of transmitter	param=0 (relay 1) param=1 (relay 2) param=2 (relay 3) param=3 (relay 4)	reldefinition.xml	reldefinition.xml
/config/setheatertime	Set sensor heating information		heatertime.xml	heatertime.xml
/config/setoptions	Set options of transmitter		options.xml	options.xml
/action/setresettm	Not yet implemented		resettm.xml	

Find Quality Products Online at: Valuetesters.com info@valuetesters.com

Description of the XML elements

General elements

XML tag	Description	Type
measurement_value	Parent element. Contains the child elements value, unit, resolution	
value	Reading	Numerical, decimal number
unit	Unit	ASCII
number_values	Qty.	Numerical, whole number

Elements in calibration.xml

XML tag	Description	Type
calibration_data	Base element. Contains the child elements unit, attenuation, cal_reserved, cal_offset, cal_scale.	
unit	See general elements	
attenuation	Damping (0 - 15)	Numerical, decimal number
cal_offset	Offset	Numerical, whole number
cal_scale	Parent element. Contains the child elements cal_minscale, cal_maxscale	
cal_minscale	Scaling value	Numerical, decimal number
cal_maxscale	Scaling value	Numerical, decimal number

Elements in collectivealarm.xml

XML tag	Description	Type
colalarmtable	Base element. Contains the child elements alarm_numbers, alarm	
alarm_numbers	Number of alarm messages	Numerical, whole number
alarm	Parent element. Contains the child elements alarm_event, alarm_state	
alarm_event	Type of alarm	ASCII
alarm_state	Status of the alarm 0 = alarm inactive 1 = alarm active	Numerical, whole number

Elements in firmwaredate.xml

XML tag	Description	Type
firmware_date	Base element. Contains the child elements year, month, day	

Find Quality Products Online at: Valuetesters.com info@valuetesters.com

XML tag	Description	Type
year	Year	Numerical, whole number
month	Month	Numerical, whole number
day	Day	Numerical, whole number

Elements in heatertime.xml

XML tag	Description	Type
heatertime	Base element. Contains the child element heatertimeoff	
heatertimeoff	Time sensor heating off in min	Numerical, whole number

Elements in hourscount.xml

XML tag	Description	Type
hourcount	Base element. Contains the child element hours	
hours	Service hour counter in h	Numerical, whole number

Elements in identification.xml

XML tag	Description	Type
ident	Base element. Contains the child element device_id	
device_id	Transmitter type	Numerical, whole number

Elements in laststatusmessage.xml

XML tag	Description	Type
mufmsg	Base element. Contains the child elements msg, sn, hours	
msg	Status message	ASCII
sn	Serial number	ASCII, 8 characters
hours	Service hour counter in h	Numerical, whole number

Elements in onlinevalue.xml

XML tag	Description	Type
online_values	Base element. Contains the child elements number_values, measurement_value	
number_values	See general elements	
measurement_value	See general elements	

Find Quality Products Online at: Valuetesters.com info@valuetesters.com

Elements in options.xml

XML tag	Description	Type
options	Base element. Contains the child elements device_options, production_options	
device_options	See device_options description	Numerical, whole number
production_options	See production_options description	Numerical, whole number

Elements in reldefinition.xml

XML tag	Description	Type
relay_data	Base element. Contains the child elements relay_channel, relay_number, relay_status, sw_point_character, sw_point_value, hysteresis_value	
relay_channel	Measurement channel linked to the relay	Numerical, whole number
relay_number	Relay number (0 - 2)	Numerical, whole number
relay_status	Status of relay 0 = off 1 = on	Numerical, whole number
sw_point_charact	Switch point: Switch point: 0 = low-limit monitoring 1 = high-limit monitoring	Numerical, whole number
sw_point_value	Switch point	Numerical, decimal number
hysteresis_value	Hysteresis	Numerical, decimal number

Elements in serialnumber.xml

XML tag	Description	Type
serialnumber	Base element. Contains the child element number	
number	Serial number	ASCII, 8 characters

Elements in status.xml

XML tag	Description	Type
mufstatus	Base element. Contains the child elements statemsg, staterel, statecounter	
statemsg	Status message See statemsg description	Numerical, whole number
staterel	Status relay See staterel description	Numerical, whole number

Find Quality Products Online at: Valuetesters.com info@valuetesters.com

XML tag	Description	Type
statecounter	Counter	Numerical, whole number

Elements in usersettings.xml

XML tag	Description	Type
usersettings	Base element. Contains the child elements (pressure)* , (abs_pressure_pa_process)*, (humidity_process)*, (temperature_c_process)*, (humidity_norm)*, (abs_pressure_pa)*, h2o2, setting_display, backlight, contrast, language, disp_msg, h2o2_prozess	
pressure	Absolute pressure	Numerical, decimal number
h2o2	H2O2 value	Numerical, decimal number
setting_display	Auto OFF background lighting 0 -> background lighting auto off 1 -> background lighting stays on	Numerical, whole number
backlight	Brightness of background lighting 0 to 9 (0 = off, 9 = max.)	Numerical, whole number
contrast	Display contrast 0 to 9 (0 = min., 9 = max.)	Numerical, whole number
language	Language 0 ->GERMAN 1 ->ENGLISH 2 ->FRENCH 3 ->SPANISH 4 ->ITALIAN 5 ->JAPANESE 6 ->SWEDISH	Numerical, whole number
disp_msg	Status messages display 0 = off 1 = on	Numerical, whole number
h2o2_prozess	H2O2 process 0 = via H2O2 water 1 = process with evaporated H2O2	Numerical, whole number
abs_pressure_pa_process,	Pressure process data, absolute pressure in Pa	Numerical, decimal number
humidity_process	Pressure process data, process humidity in % RH	Numerical, decimal number
temperature_c_process	Pressure process data, process temperature in °C	Numerical, decimal number
abs_pressure_pa	Humidity process data, absolute pressure in Pa	Numerical, decimal number

* Child elements are optional

Find Quality Products Online at: Valuetesters.com info@valuetesters.com

Elements in versions.xml

XML tag	Description	Type
firmware_version	Base element. Contains the child element version	
version	Firmware version:	ASCII, 6 characters

Elements in viewchannels.xml

XML tag	Description	Type
view_channels	Base element. Contains the child elements number_values, view_channel	
number_values	See general elements	
view_channel	Parent element. Contains the child elements channel_info, measurement_value, meas_status	
channel_info	Parent element. Contains the child elements connector_info, channel_type	
measurement_value	See general elements	
meas_status	Parent element. Contains the child elements min, max, mean	
connector_info	Channel (transmitter/probe)	ASCII
channel_type	Parameter details	ASCII
min.	Minimum reading	Numerical, decimal number
max.	Maximum reading	Numerical, decimal number
mean	Mean value	Numerical, decimal number

production_options description

Content of production_options is a double word type number (32 bit). The individual hardware options are bit-coded here.

xxxx xxxx xxxx xxxx xxxx xxx1 2222 3334

1 0=2-wire
  1=4-wire

2 free

3 0=4 to 20 mA
  1=0 to 20 mA
  2=0 to 1 V
  3=0 to 5 V
  4=0 to 10 V

Find Quality Products Online at: Valuetesters.com info@valuetesters.com

xxxx xxxx xxxx xxxx xxxx xxx1 2222 3334

4 0=1 analog output

1=3 analog outputs

device_options description

Content of device_options is a double word type number (32 bit). The individual instrument options are bit-coded here.

xxxx xxxx xxxx xxxx xxxx xxxx 1222 2345

1 0=probe is invalid

1=probe is valid

2 free

3 free

4 0=no relay present

1=relay present

5 0=no display

1=display present

statemsg description

Content of statemsg is a double word type number (32 bit). The individual status messages are bit-coded here.

If statemsg = 0 there are no new messages.

If statemsg != 0

xxxx xxxx xxxx xxxx xxxx xxxx 1234 5678

1 free

2 1=probe information

3 1= probe warning

4 1=probe error

5 free

6 1=transmitter information

7 1=transmitter warning

8 1=transmitter error

Find Quality Products Online at: Valuetesters.com info@valuetesters.com

staterel description

Content of staterel is a double word type number (32 bit). The individual relay states are bit-coded here.

xxxx xxxx xxxx xxxx xxxx xxxx xxxx 1234

1 0=relay 4 is not set

1=relay 4 is set

2 0= relay 3 is not set

1=relay 3 is set

3 0=relay 2 is not set

1=relay 2 is set

4 0=relay 1 is not set

1=relay 1 is set

More information can be found in the download area at www.testo.com.

4.3.4.6. Adjusting the instrument

The testo adjusting concept allows the entire signal chain from the sensor signal (probe) and the digital signal (within the transmitter) through to the analog signal (transmitter output signal) to be adjusted (see diagram).

1-point adjustment	**2-point adjustment**
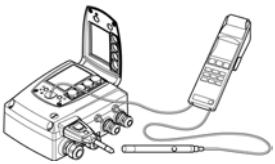	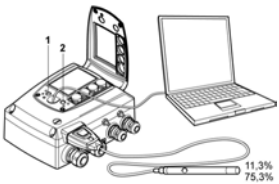
Adjustment via • testo 400/650 handheld instrument with adjustment adapter • P2A software • User menu	Adjustment via • Adjustment keys (**1**, **2**) • P2A software

Find Quality Products Online at: Valuetesters.com info@valuetesters.com

Analog adjustment	n-point adjustment
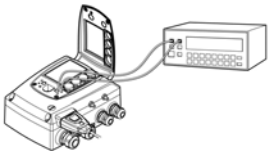	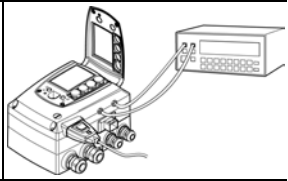
Adjustment using a precise multimeter and transmission of analog reference value in • User menu or • P2A software	Adjustment using a precise pressure sensor and transmission of analog reference value in • User menu or • P2A software

Either the 1-point adjustment or 2-point adjustment is suitable for adjusting the sensor signal - digital signal chain.

The testo 6381 transmitter has digital probes whose adjustment information is stored in the probes' internal memory. Both 1-point and 2-point adjustments can thus be carried out on another testo 6381 (e.g. in the calibration laboratory).

4.3.4.7. Overview: Adjustment keys and test contacts

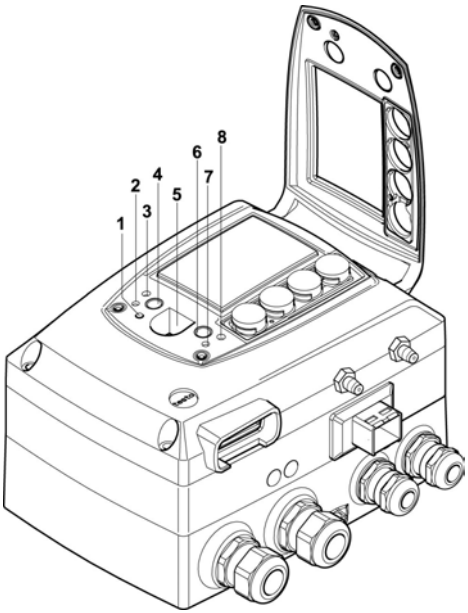

1 Status LED
2. Contact ch. 1+
3. Contact ch. 1-
4. Adjust key 11.3 %
5. Service interface
6 Adjust key 75.3 %
7. Contact ch. 2+
8. Contact ch. 2-

Find Quality Products Online at: Valuetesters.com info@valuetesters.com

4.3.4.8. 1-point adjustment (offset - humidity/temperature)

In the 1-point adjustment, the reading at the working point is raised to the reference value so that there is no longer any deviation in the working point. The reference condition can be measured using a precise handheld instrument (e.g. testo 400/650 with precision humidity probe) or be created in an air conditioning cabinet.

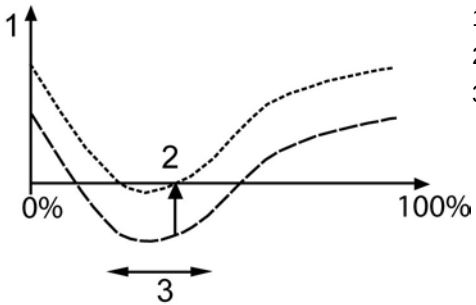

1 Deviation
2 Working point
3 Working range

The advantage of the 1-point adjustment is the good measuring result in the working range. But the further away the measurement is from the working point, the greater the deviation can become. The 1-point adjustment should therefore only be used for a relatively narrow measuring range (working range), e.g. clean room applications, air conditioning applications for storage and similar.

The 1-point adjustment can be performed

- via the user menu (see Editing Main Menu Adjust, page 76) or
- via the P2A software (see volume 2, 1-point adjustment, page 152) or
- directly by means of a Testo handheld instrument (testo 400/650) (see description of how to proceed below).

Please note that the 1-point adjustment is generally performed on the basis of the % RH and °C/°F parameters.

Find Quality Products Online at: Valuetesters.com info@valuetesters.com

Adjusting testo 6381 using testo handheld instrument

✓ The service flap is open, a testo 400/650 handheld instrument with a precision humidity probe is ready.

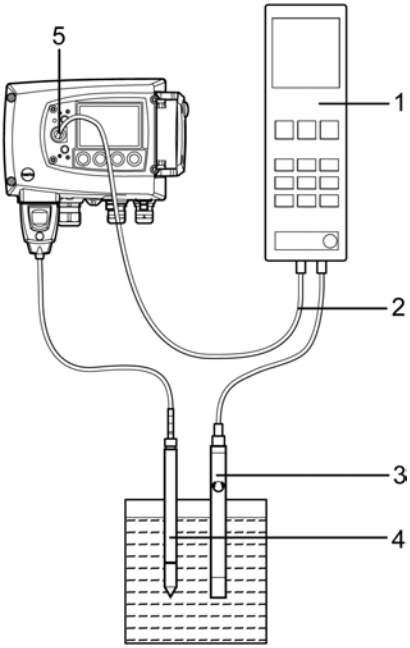

1. Connect testo handheld instrument 400/650 (**1**) with connected humidity reference probe (**3**) (order no. reference set 0699 3656/20) to the service interface (**5**) of the testo 6381 via the adjustment adapter (**2**) (connected to probe socket 1 of the handheld instrument).
2. Expose the humidity probe (**4**) of the testo 6381 and the reference probe (**3**) to the same reference conditions (e.g. in the humidity generator) and allow climatic conditions to equalize.
3. Switch on the testo 400/650. The two-part display of the handheld instrument will show the values of the transmitter on the left, and the values of the reference probe on the right. The humidity and temperature values are adjusted to the reference probe using the **Probe > Probe Adjustment** menu item on the testo 400/650. The 1-point adjustment is performed for both the humidity and the temperature.

Find Quality Products Online at: Valuetesters.com info@valuetesters.com

4. Disconnect the adjustment adapter (**2**) from the service interface (**5**).
5. Close the service flap.

4.3.4.9. 2-point adjustment (humidity/temperature)

With the 2-point adjustment, the parameter is adjusted to the reference value at the two standard adjustment points 11.3 % RH and 75.3 % RH. The reference conditions are created either by using testo adjustment salt pots (order no. 0554 0660) or in the humidity generator.

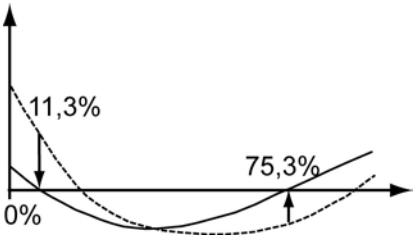

In the 2-point adjustment, the deviations between the reading and the nominal value are minimized across the entire measuring range. The 2-point adjustment is therefore recommended for large working ranges.

The 2-point adjustment can be performed

- via P2A software (see volume 2, 2-point adjustment, page 154) or
- using the adjustment keys under the service flap, see description of how to proceed below.

A previous 1-point adjustment is undone during a 2-point adjustment.

Adjustment with the standard testo adjustment salt pots is not suitable for the testo 6614 (heated for high-humidity applications) and testo 6615 (trace humidity) probes.

The reference conditions should be generated in a humidity generator to adjust these probes. In addition, these probes can also be adjusted at a third adjustment point by Testo Service.

- testo 6614: third adjustment point at 90 % RH
- testo 6615: third adjustment point at -40 °Ctd/-40 °Ftd

Find Quality Products Online at: Valuetesters.com info@valuetesters.com

Adjusting testo 6381 using adjustment keys

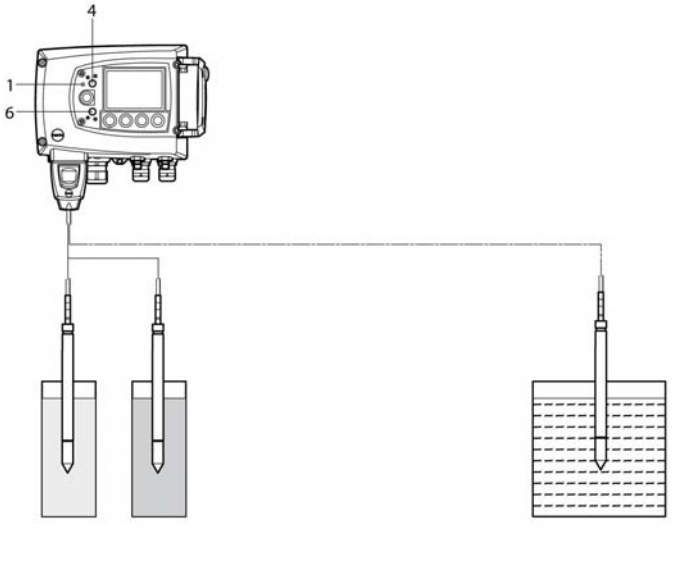

11.3 % RH ⇒ 75.3 % RH
1.5 h 1.5 h
(salt pots)

or

11.3 % RH ⇒ 75.3 % RH
1.5 h 1.5 h
(humidity generator)

✓ The service flap of the testo 6381 is open:

1. Expose the humidity probe of the testo 6381 to the reference condition of 11.3 % RH for at least 1.5 hours at 25 °C.
2. After this equalization period, press the **11.3 %** adjustment key (**4**) for at least 10 seconds with something like a ball-point pen that is not too sharp.

- The LED (**1**) flashes when the adjustment process begins. After about 10 seconds, the **2-point adjustment 11.3 %** status message appears on the display.
- Completion of the adjustment is signalled by the LED (**1**) coming on permanently and the **Probe reset** status message is shown.

3. Carry out the adjustment analogously for the reference condition 75.3 % RH. Press the **75.3 % RH** adjustment key (**6**) to do this.
4. Close the service flap.

Find Quality Products Online at: Valuetesters.com info@valuetesters.com

4.3.4.10. Analog output adjustment

The purpose of adjusting the analog outputs is to adjust the signal chain from the digital signal (within the transmitter) to the analog outputs. The signal type that was appointed for the transmitter is adjusted respectively for each channel (e.g. 4 to 20 mA or 0 to 1 V, etc.).

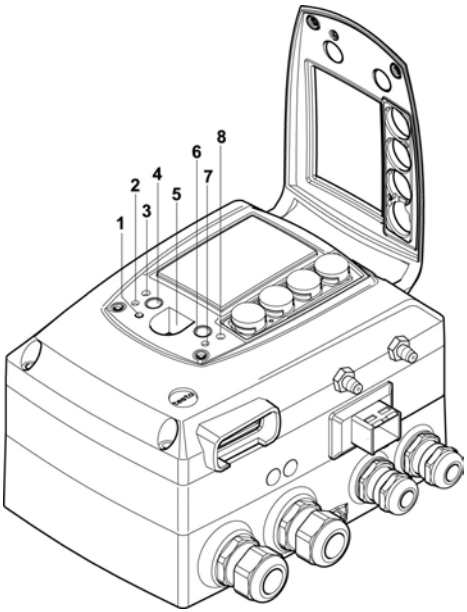

1 Status LED
2. Contact ch. 1+
3. Contact ch. 1-
4. Adjust key 11.3 %
5. Service interface
6. Adjust key 75.3 %
7. Contact ch. 2+
8. Contact ch. 2-

Adjusting analog outputs 1 and 2 (optional)

✓ With testo 6381 with current output: Load of max. 500 Ω is connected to channel that is to be adjusted (see Plug-in connections for power supply and channels, page 32)

✓ A precise multimeter (minimum requirement: resolution 6.5 digits, at least 5-times more accurate than the 6381) is available.

> **i** If only a simple multimeter is available, the analog outputs must not be adjusted.

✓ The service flap is open.

1. Connect the inputs of the multimeter with the contacts (**2**) and (**3**) for channel 1 or with contacts (**7**) and (**8**) for channel 2.

Find Quality Products Online at: Valuetesters.com info@valuetesters.com

2. Transfer the reference analog value measured with the multimeter into the P2A software (see volume 2, Adjusting the analog output, page 156) or enter it via the user menu (see Performing analog adjustment, page 77).
3. Disconnect connections between the multimeter and the contacts of the testo 6381 and close the service flap.

Adjusting analog output 3 (optional)

If the optional third analog output is to be adjusted, a cable connection to measure the analog value must be installed. Do this by proceeding as follows:

1. Open transmitter (see Opening the instrument, page 25).
2. Connect measuring cable to the terminals of the third analog output and guide through the cable coupling and out of the transmitter.
3. Reassemble upper part of transmitter (see Closing the instrument, page 36).
4. Connect cable ends to the inputs of the multimeter.
5. Transfer the reference analog value measured with the multimeter into the P2A software (see volume 2, Adjusting the analog output, page 156) or enter it via the user menu (see Performing analog adjustment, page 77).
6. Remove the upper part of the transmitter, detach the cable connections for the adjustment of the 3rd analog output and reassemble the transmitter.

4.3.4.11. n-point adjustment (pressure)

With an n-point adjustment, the parameters at the 3-6 measurement points are adjusted to the reference value. The reference conditions are obtained by using a precise pressure sensor that should be 5-times more accurate than the transmitter.

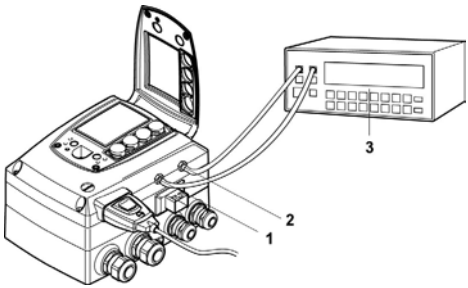

1 Positive pressure connection
2. Negative pressure connection
3. Pressure sensor

Find Quality Products Online at: Valuetesters.com info@valuetesters.com

ℹ	The number of measuring points is set to 3 by the factory and can only be changed using the P2A software (see **n-point adjustment** page 155)
ℹ	The n-point adjustment must always be carried out to its full extent and in good time at all selected measurement points.

✓ A precise pressure sensor (5-times more accurate than the transmitter, e.g. DPC precision pressure sensor from testo industrial services) is available.

1. Connect the positive output of the pressure sensor (**3**) to the positive pressure connection of the transmitter (**1**) and the negative output of the pressure sensor (**3**) to the negative pressure connection of the transmitter (**2**).
2. Transfer the reference pressure value created with the pressure sensor into the P2A software (see volume 2, n-point adjustment, page 155) or enter it via the user menu (see Performing the pressure adjustment, page 78).
3. Repeat step 2 for all of the measuring points.
4. Disconnect connections between the pressure sensor and the pressure connections of the testo 6381.

4.3.4.12. High-humidity adjustment for testo 6614

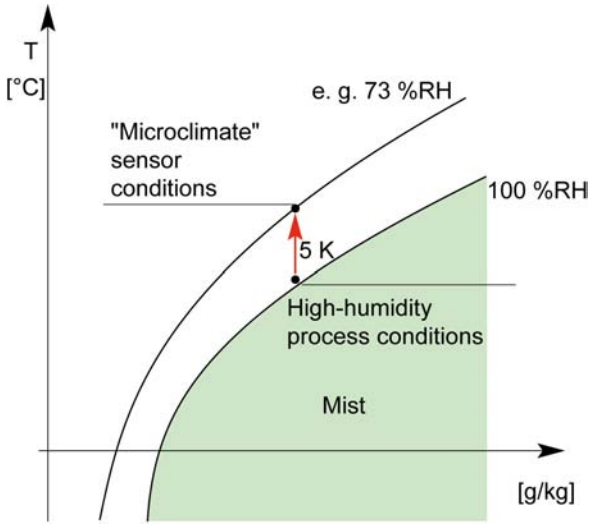

Find Quality Products Online at: Valuetesters.com info@valuetesters.com

With the testo 6614, the rear of the Testo humidity sensor is heated, creating a microclimate around the sensor (within the filter) that is constantly 5 K warmer than the actual process conditions.

As can be seen in the Mollier diagram, this reduces the relative humidity at the sensor from around 100 % RH to a lower value, e.g. 73 % RH. In this range, the reaction time of the sensor is noticeably shorter than in the condensation range and the risk of the sensor corroding is also reduced. Using the separate temperature probe, the testo 6381 transmitter compensates the microclimate conditions and displays the process readings.

The reference conditions (11.3 % RH and 75.3 % RH) for the 2-point adjustment of the testo 6614 should be generated in a humidity generator, as humidity adjustment sets cannot be used due to the heat generated.

The adjustment can also be carried out at a third adjustment point (90 % RH) by Testo Service so that optimum accuracy is also achieved in the high humidity ranges.

4.3.4.13. Self adjustment of testo 6615 trace humidity probe

Conventional trace humidity probes show a steep rise in measuring uncertainty at low humidities. In the testo 6615 trace humidity probe, these measuring uncertainties are corrected by means of an automatic self-adjustment process. This means that extremely accurate measuring results are also attained to -60 °Ctd.

To this end, a temperature sensor is fitted on the back of the testo 6615 which is used as a heater. A humidity and temperature value pair is taken in both the unheated and heated state. The deviation of the probe obtained from these pairs of values is automatically corrected.

Find Quality Products Online at: Valuetesters.com info@valuetesters.com

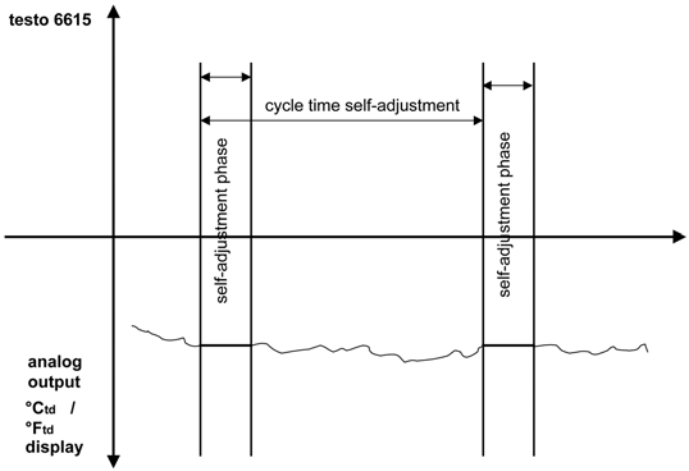

The heating time and storing of cycles can be edited in the P2A software; for example, they can be deactivated by setting the two parameters to "0".

- Deactivating the adjustment function of the testo 6615 will reduce measuring accuracy and should therefore be restricted to the shortest possible length of time.
- During the heating phase, the relay and analog outputs, the display value and output value are "frozen", see diagram above. **Self-adjustment active** is shown in the display until it has finished. The factory setting for self-adjustment time (incl. heating time, calculation time, cooling time) requires 30 minutes daily.
- In the factory setting, a **third adjustment point** (-40 °Ctd) is approached for the testo 6615 in addition to the 2-point adjustment. This special adjustment can be performed again by your Testo Service team if necessary.

Find Quality Products Online at: Valuetesters.com info@valuetesters.com

4.4. Operation

4.4.1. Relationship between user menu and mini-DIN socket is active

The testo 6381 can be parameterized using either the user menu or the P2A software (see volume 2, Parameterizing, adjusting and analyzing software (P2A software) page 128).

The testo 6381 transmitter can only be operated via the display and keypad if the display option is available.

If the testo 6381 is connected to the P2A software, the user menu is blocked for the duration of the communication. The message Service plug is shown in the display of the testo 6381. As soon as the P2A software is disconnected, the user menu is accessible again.

4.4.2. Key cover

To prevent unauthorized operation of the keys, the standard key frame can be replaced with a key cover.

If the key cover has been assembled, the service flap must be opened for operation.

Find Quality Products Online at: Valuetesters.com info@valuetesters.com

Attaching the key cover

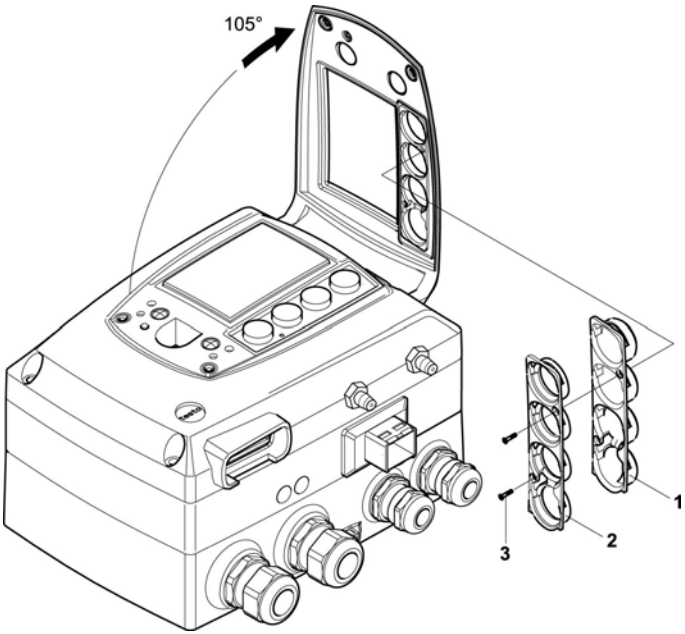

✓ The service flap is opened, see Opening the instrument, page 25.

1. Unscrew screws **(3)** and remove key frame **(2)**.
2. Insert key cover **(1)** into service flap and tighten screws **(3)**.
3. Close and screw down the service flap.

4.4.3. Password protection

The user menu can be protected with a four-digit numerical code (see Editing Main Menu Settings, page 69) so that access to the user menu is denied to unauthorized persons not familiar with this numerical code.

If the password protection is not to be used, the numerical code "0000" must be entered. This is also the status upon delivery.

4.4.4. Structure of user menu

At the main menu level, the user menu comprises the following:

- Main Menu Channel 1
- Main menu of channel 2 (if this option is available)

Find Quality Products Online at: Valuetesters.com info@valuetesters.com

- Main menu of channel 3 (if this option is available)
- Main Menu Alarm
- Main Menu Settings
- Main Menu Analysis
- Main Menu Messages
- Main Menu Ident
- Main Menu Adjust
- Main Menu Reset

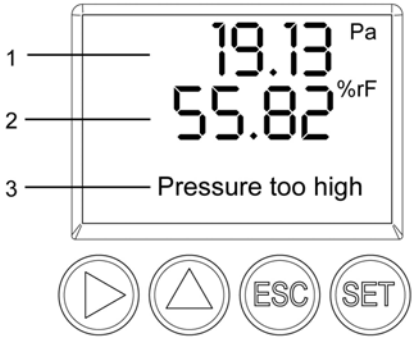

1 Channel 1 display
2 Channel 2 display
3 Channel 3 display or for messages

Four keys enable the user to navigate/scroll through the menus and enter/amend values and settings:

Key	Function/description
SET	• In Measuring Mode: changes to parameterization • In Parameterizing Mode: confirms a selection or setting
ESC	• Leaves a menu (without modifying any settings)
▶	• Selecting: scrolls through menus (downwards) or selectable alternatives • Editing: changes to next digit (to the right)
▲	• Selecting: scrolls through menus (upwards) or selectable alternatives • Editing: increases the value of the current digit by 1

Find Quality Products Online at: Valuetesters.com info@valuetesters.com

4.4.5. Overview of the testo 6381 user menu

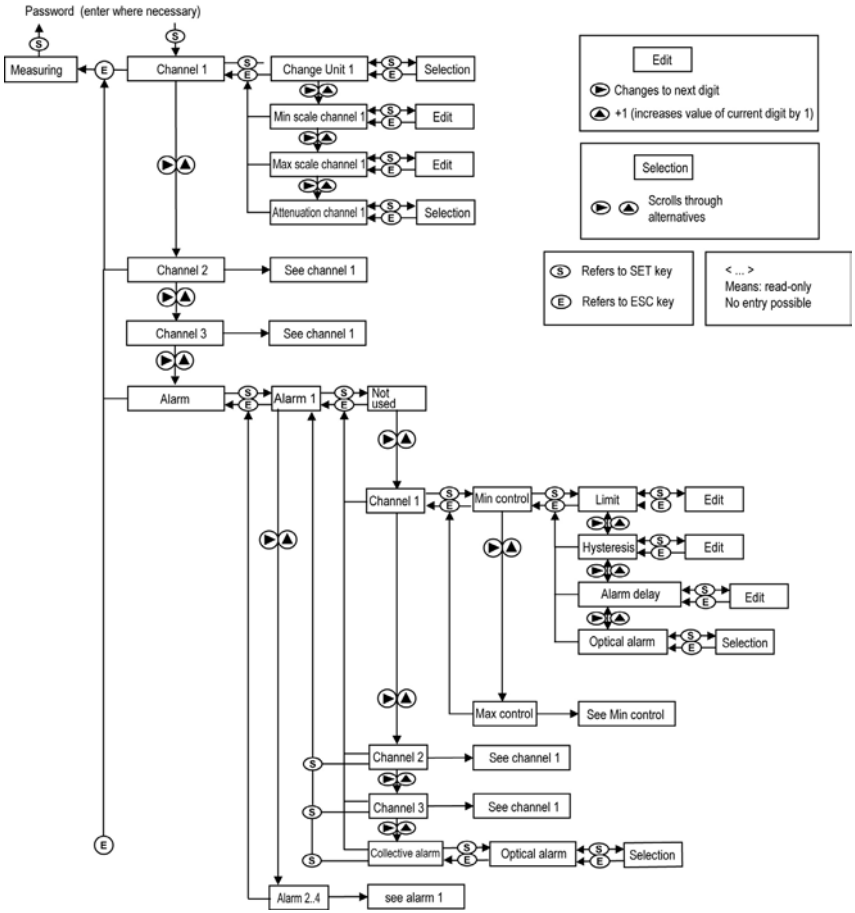

Find Quality Products Online at: Valuetesters.com info@valuetesters.com

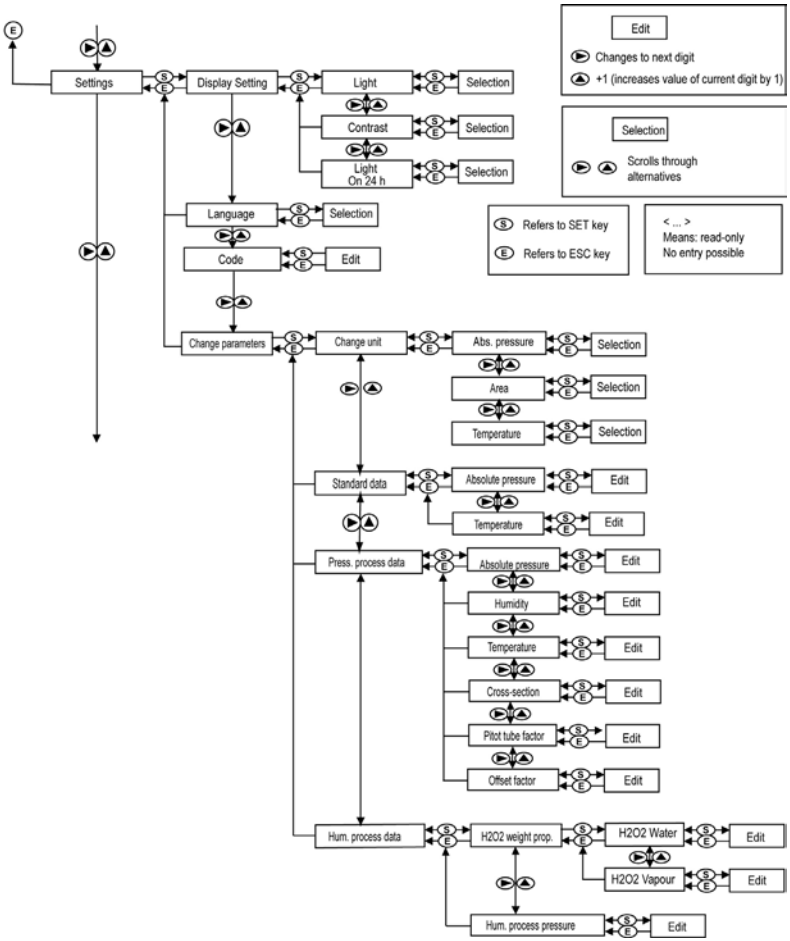

Find Quality Products Online at: Valuetesters.com info@valuetesters.com

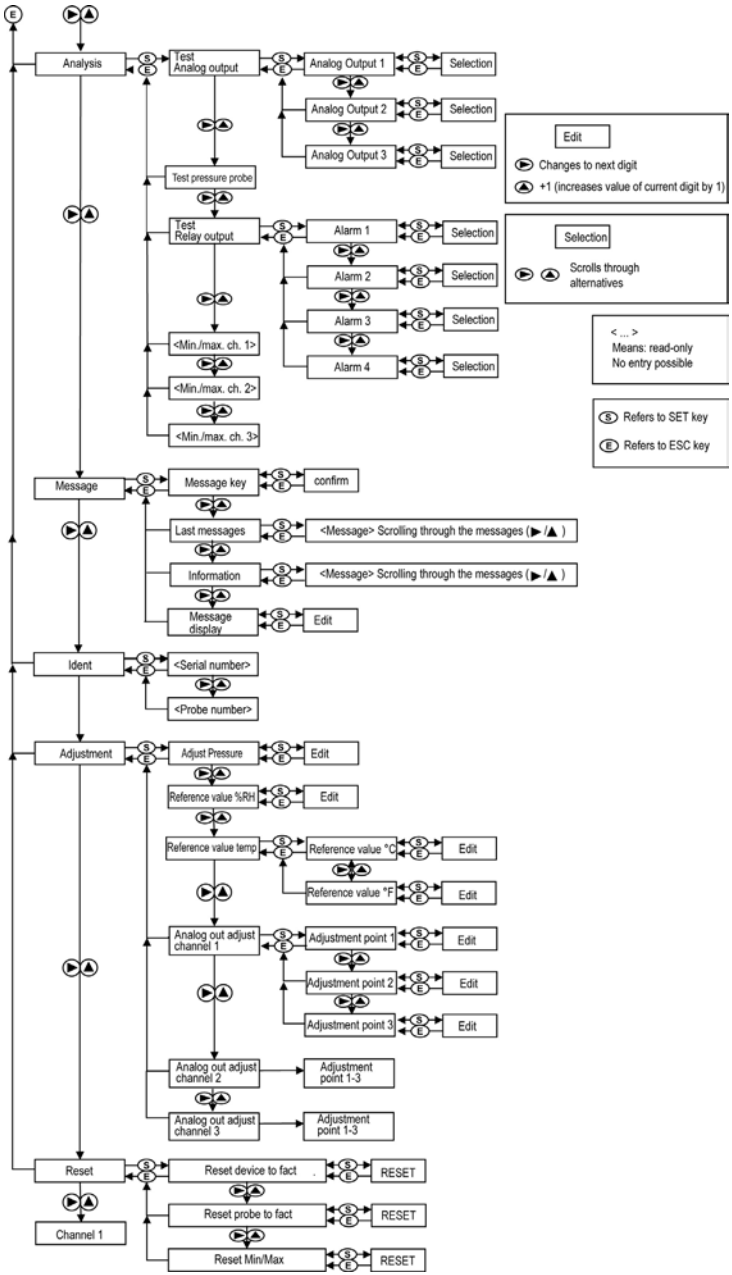

Find Quality Products Online at: Valuetesters.com info@valuetesters.com

4.4.6. The individual main menus

4.4.6.1. Editing main menu of channel 1

An overview is given in Overview of the testo 6381 user menu, page 63).

You can perform basic settings for channel 1.

1. In the Measuring Mode press **SET**, select **Main Menu Channel 1** with ▶ or ▲ and confirm selection with **SET**.

   One of the following parameters can now be selected using ▶ or ▲, after which the selection must be confirmed with **SET**:

- Channel 1 Unit

  The parameter for this channel is selected.

  Edit/select parameter with ▶ or ▲, confirm with **SET** or abort entry with **ESC**.

- Scale minimum for channel 1:

  The lower scale limit is edited; Unit as selected above.

  Editing the value: Scroll one digit to the right using ▶ and increase value of digit by 1 using ▲. Confirm with **SET** or abort entry with **ESC**.

- Scale maximum for channel 1

  The upper scale limit is edited;

  Unit as selected above.

  Editing the value: Scroll one digit to the right using ▶ and increase value of digit by 1 using ▲. Confirm with **SET** or abort entry with **ESC**.

- Signal delay ("Attenuation") for channel 1

  The analog signal can be delayed ("Attenuation"); a time constant is selected for this (1 = no delay; 15 = longest delay)

  Edit/select parameter with ▶ or ▲, confirm with **SET** or abort entry with **ESC**.

2. Continue to the main menu with ▶ or ▲ or return to Measuring Mode with **ESC**.

4.4.6.2. Editing Main Menu Channel 2 (if this option is available)

See channel 1.

Find Quality Products Online at: Valuetesters.com info@valuetesters.com

4.4.6.3. Editing Main Menu Channel 3 (if this option is available)

See channel 1.

4.4.6.4. Editing Main Menu Alarm

With the alarm, the relays, available as options, are programmed. In addition, the alarm statuses are shown on the display (top right) (even without relays).

You can choose whether the alarm is to be used to monitor limit values or as a collective alarm. If an alarm is to be used to monitor limit values, you can choose between monitoring the minimum or maximum value and set a limit value and hysteresis for each alarm.

In addition, every alarm can be linked to a clearly visible visual alarm (display background lighting flashes).

An alarm delay between 0 and 240 seconds can still be assigned to every alarm used for limit value monitoring so that both the corresponding relay effect and the visual alarm are delayed. If the alarm status goes out within the set alarm delay time, neither the visual alarm nor a relay connection is triggered. .

With an alarm status present, the visual alarm and all relay outputs can be reset by means of acknowledgement. The triggering of a new alarm cannot be enabled until after the alarm status goes out.

1. In the Measuring Mode press **SET**, select **Main Menu Alarm** with ▶ or ▲ and confirm selection with **SET**.

- Four alarms can be parameterized.

2. Select **Alarm x** with ▶ or ▲ and confirm selection with **SET**.

Using alarm to monitor limit values

NO contact

Monitoring minimum

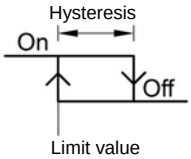

Monitoring maximum

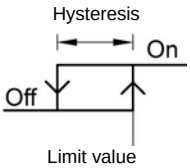

Find Quality Products Online at: Valuetesters.com info@valuetesters.com

NC contact

Monitoring minimum

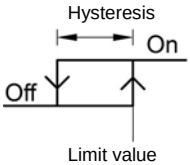

Monitoring maximum

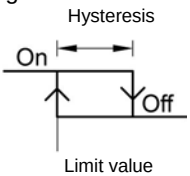

3. Select **Channel x** (e.g. "Channel 1") with ▶ or ▲ and confirm selection with **SET**.
4. Select **Max control** or **Min control** with ▶ or ▲ (see graphic).
5. Press **SET** and edit **Limit value** as well as **Hysteresis**: Scroll one digit to the right using ▶ and increase value of digit by 1 using ▲. Confirm with **SET** or abort entry with **ESC**.
6. Select **Visual alarm** with ▶ or ▲. Select **YES** or **NO** with ▶ or ▲. Confirm with **SET** or abort entry with **ESC**.
7. Press **SET** and edit **Alarm delay**: Scroll one digit to the right using ▶ and increase value of digit by 1 using ▲ (0 to 240 seconds possible). Confirm with **SET** or abort entry with **ESC**.
8. Return to **Channel x** with **ESC**.
9. Return to **Alarm x** with **ESC**.
10. Change to the other relays using ▶ or ▲ and perform settings in the same way.

Using alarm as collective alarm or not using it at all

If an alarm is assigned to the collective alarm, the relay is switched and a visual alarm can be issued via the display as soon as (at least) one of the warning or error messages of the testo 6381 transmitter (or the connected testo 6610 probe) becomes active.

> ℹ The messages affecting the collective alarm can only be selected in the P2A software, see volume 2, Using the software, page 131

✓ Alarm is selected (see previous steps 1 and 2).

1. Use ▶ or ▲ to determine whether **Alarm x** should be used as a **Collective alarm** or **not used**. Confirm selection with **SET**.
2. If collective alarm is selected: Select **Visual alarm** with ▶ or ▲. Select **YES** or **NO** with ▶ or ▲. Confirm with **SET** and return to **Alarm x**.

Find Quality Products Online at: Valuetesters.com info@valuetesters.com

3. Change to another alarm using ▶ or ▲ and perform settings in the same way.
4. Return to **Main Menu Alarm** with **ESC**.
5. Continue to **Main Menu Settings** with ▶ or ▲ or return to Measuring Mode with **ESC**.

4.4.6.5. Editing Main Menu Settings

You can edit instrument settings and other settings.

> In Measuring Mode, press **SET**, select **Main Menu Settings** using ▶ or ▲ and confirm selection with **SET**.

You can edit settings for:

- Display
- Language
- Code
- Units
  - Absolute pressure
  - Area
  - Temperature
- Standard data
  - Absolute pressure
  - Temperature
- Pressure process data
  - Absolute pressure
  - Humidity
  - Temperature
  - Cross-section
  - Pitot tube factor
  - Correction factor
- Humidity process data
  - H2O2 percentage by weight
  - Humidity process pressure

Find Quality Products Online at: Valuetesters.com info@valuetesters.com

Editing display settings

You can set the brightness and contrast of the display.

1. Select **Display Settings** with ▶ or ▲ and confirm selection with **SET**.
2. Select **Backlight** or **Contrast** with ▶ or ▲ and confirm selection with **SET**.

One of the following parameters can now be selected using ▶ or ▲, after which the selection must be confirmed with **SET**:

- **Backlight**

  The display illumination is changed.

  Edit/select parameter with ▶ or ▲, confirm with **SET** or cancel entry with **ESC** (the effect of the change in parameter can be seen during input).

- **Contrast**

  The brightness difference between the display background and the displayed values is changed.

  Edit/select parameter with ▶ or ▲, confirm with **SET** or cancel entry with **ESC** (the effect of the change in parameter can be seen during input).

- **Backlight 24h on**

  Select **On** or **Off** using ▶ or ▲ and confirm with **SET**.

  Off: The display light switches off automatically if no button was pressed for 10 seconds.

  On: The display light is activated

3. Return to **Display Settings** with **ESC** and use▶ or ▲ to continue to **Language**.

Selecting language

You can select the language for the plain text line in the display.

> Press **SET**, select required language with ▶ or ▲, confirm selection with **SET** and return to language.

Only choose a language that you can understand well.

Find Quality Products Online at: Valuetesters.com info@valuetesters.com

Editing code settings

You can set the access code (password).

> ℹ If a code other than "0000" (factory setting) is set, the transmitter can only be operated once this code has been entered via the menu.

1. Select **Code** with ▶ or ▲ and confirm selection with **SET**.
2. Scroll one digit to the right using ▶ and increase value of digit by 1 using ▲. Confirm with **SET** or abort entry with **ESC**.
3. Return to **Code** with **ESC** and use▶ or ▲ to continue to **Change parameters**.

Select unit (Change unit)

This setting affects the displayed unit of all readings.

1. Select **Change parameters** with ▶ or ▲, confirm selection with **SET** or cancel with **ESC**.
2. Select **Change unit** with ▶ or ▲, confirm selection with **SET** or cancel with **ESC**.
3. Select the required variable (absolute pressure/temperature) with ▶ or ▲, confirm selection with **SET** or cancel with **ESC**.
4. Select the required unit with ▶ or ▲, confirm selection with **SET** or cancel with **ESC**.
5 Return to **Change unit** with **ESC** and continue to **Standard data** with ▶ or ▲.

Editing standard data

Setting individual values for the standard data to calculate the volumetric flow rate.

1. Select **Standard data** with ▶ or ▲, confirm selection with **SET** or cancel with **ESC**.
2. Select the required variable (absolute pressure/temperature) with ▶ or ▲, confirm selection with **SET** or cancel with **ESC**.
3. Scroll one digit to the right using ▶ and increase value of digit by 1 using ▲. Confirm with **SET** or abort entry with **ESC**.
4. Return to **Standard data** with **ESC** and use▶ or ▲ to continue to **Pressure process data**.

Find Quality Products Online at: Valuetesters.com info@valuetesters.com

Editing pressure process data

Setting of the process data for the Pitot tube calculation.

1. Select **Pressure process data** with ▶ or ▲ and confirm selection with **SET**.
2. Select the required variable (absolute pressure/humidity/temperature/cross-section/Pitot tube factor/correction factor) with ▶ or ▲, confirm selection with **SET** or cancel with **ESC**.
3. Scroll one digit to the right using ▶ and increase value of digit by 1 using ▲. Confirm with **SET** or abort entry with **ESC**.
4. Return to **Pressure process data** with **ESC** and use▶ or ▲ to continue to **Humidity process data**.

Editing Humidity process data

This menu is only used to parameterize humidity measurements in H_2O_2 atmospheres (e.g. in sterilization processes) and determines whether °Ctm or °Ftm is the output parameter.

1. Select **Humidity process data** with ▶ or ▲ and confirm selection with **SET**.
2. Select **H202 weight prop.** with ▶ or ▲, confirm selection with **SET** or cancel with **ESC**.

   The selection **H_2O_2 water** or **H_2O_2 vapour** in the submenu describes whether H_2O_2 is generated by means of evaporation or is actively vaporized in the process.
3. Select **H_2O_2 water** or **H_2O_2 vapour** with ▶ or ▲ and confirm with **SET**.
4. Edit proportion by weight of the H_2O_2 in % (% H_2O_2 proportion by weight in the liquid initial solution): Scroll one digit to the right using ▶ and increase value of digit by 1 using ▲. Confirm with **SET** or abort entry with **ESC**.
5. Return to **H202 weight prop.** with **ESC** and use▶ or ▲ to continue to **Humidity process pressure**.
6. Select **Humidity process pressure** with ▶ or ▲ and confirm selection with **SET**.
7. Edit humidity process pressure: Scroll one digit to the right using ▶ and increase value of digit by 1 using ▲. Confirm with **SET** or abort entry with **ESC**.
8. Return to **Change parameters** with **ESC**.
9. Return to **Main Menu Settings** with **ESC**.

Find Quality Products Online at: Valuetesters.com info@valuetesters.com

4.4.6.6. Editing Main Menu Analysis

You can test the functionality of analog and relay outputs. In addition, you can read off the minimum and maximum values (since the last voltage supply or reset of the min./max. values).

Testing functionality of analog outputs

> This function affects the analog outputs directly, not only the test contacts.

1. In the Measuring Mode press **SET**, select main menu **Analysis** with ▶ or ▲ and confirm selection with **SET**.

- **Test Analog Output** is shown.

2. Press **SET** and choose between **Analog output 1, 2, 3** with ▶ or ▲.
3. Press **SET**, scroll one digit to the right using ▶ and increase value of digit by 1 using ▲. Any analog output value can be predefined, e.g. for an analog output of 4 to 20 mA, the value "6.0 mA". Confirm with **SET** or abort entry with **ESC**.
4. Accept setting by pressing **SET** and test with multimeter (minimum requirement: resolution 6.5 digits, at least 2-times more accurate than the 6381) as follows:

   Analog output 1 or 2: Via test contacts under service flap, see diagram.

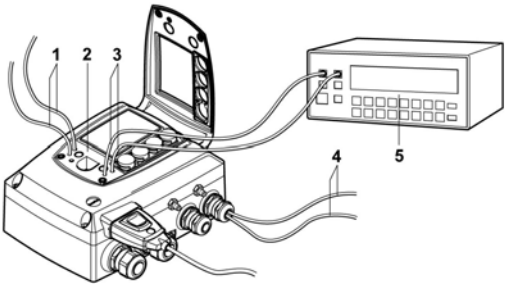

1 Channel 1 test contacts
2 Service interface
3 Channel 2 test contacts
4 Ends of channel 3 cables
5 Multimeter

   Analog output 3: Connect measuring cables to terminals for channel 3, guide measuring cables out of housing and perform measurement outside of the transmitter, see diagram.

6. Return to **Test Analog Output** with **ESC** and use▶ or ▲ to continue to Test Relay Output.

Find Quality Products Online at: Valuetesters.com info@valuetesters.com

Testing functionality of the pressure sensor (Test pressure sensor)

This function is only required to calibrate the pressure sensor.

Testing functionality of relay outputs

1. Press **SET** and choose between **Alarm 1, 2, 3, 4** with ▶ or ▲.
2. Press **SET**.

   The relay can now be tested. You can choose between **OFF** and **ON** using ▶ or ▲. If **ON** is chosen, the NO contact is closed, the NC contact opened. If **OFF** is chosen, the NC contact is closed, the NO contact opened.
3. To test, route a measuring cable from the relay terminals (see Connecting the relay outputs, page 29) out of the transmitter to a multimeter (resistance measurement) or continuity tester.
4. Return to **Test Relay Output** with **SET** (starts relay test) or **ESC** (exits the menu without relay test).

Reading off min./max. values of channels

To reset the max./min. values, see Editing Reset main menu, page 79

1. Read off the min./max. values of the three channels in succession with ▶ or ▲ and return to the Main Menu Analysis with **ESC**.
2. Continue to **Main Menu Message** with ▶ or ▲ or return to Measuring Mode with **ESC**.

Find Quality Products Online at: Valuetesters.com info@valuetesters.com

4.4.6.7. Editing Message main menu

Messages can be confirmed/acknowledged, the last messages can be called up and the display of the messages can be switched on or off.

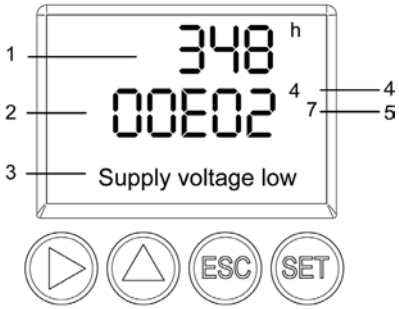

1 Operating hours at the time of message

2 Message code (see Status, warning and error messages, page 79).

3 Message text

4 Message number (example: "4/7" refers to the fourth of seven messages)

5 Number of messages present (example: "4/7" refers to the fourth of seven messages)

Using the P2A software (see volume 2, Parameterizing, adjusting and analyzing software (P2A software), page 128) you can predefine whether messages are to be shown in the display.

1. In the Measuring Mode press **SET**, select **Main Menu Message** with ▶ or ▲ and confirm selection with **SET**.
2. Confirm **Confirm message** using **SET**.
3. Select **Last messages** with ▶ or ▲ and confirm with **SET**.
4. Scroll between the warning and error messages recorded so far using ▶ or ▲ and return to **Last messages** using **ESC**.
5. Select **Information** with ▶ or ▲ and confirm with **SET**.
6. Scroll between the status messages recorded so far using ▶ or ▲ and return to **Information** using **ESC**.
7. Continue to **Display of message** with ▶ or ▲.

   ON: Measurements are shown on the display in Measuring Mode.

   OFF: No messages shown on display.
8. Select **ON** or **OFF** with ▶ or ▲ and confirm selection with **SET**.
9. Return to **Main Menu Message** with **ESC**.

Find Quality Products Online at: Valuetesters.com info@valuetesters.com

10. Continue to **Main Menu Ident** with ▶ or ▲ or return to Measuring Mode with **ESC**.

> An overview of the messages can be found in Status, warning and error messages, page 79

4.4.6.8. Calling up Main Menu Ident

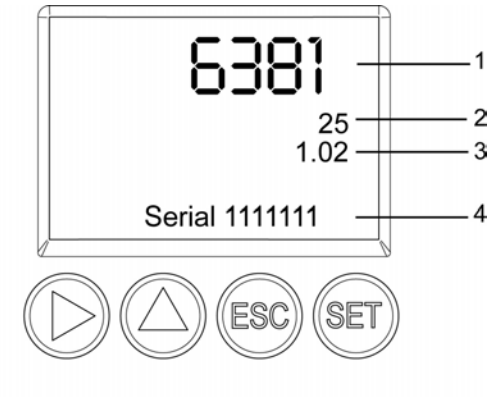

1 Instrument or probe type
2 Build number
3 Firmware version
4 Serial number

The serial numbers of the transmitter and probe can be read off.

1. In the Measuring Mode press **SET**, select **Main Menu Ident** with ▶ or ▲ and confirm selection with **SET**.

- The type, firmware version, build number and serial number of the transmitter are displayed.

> This information is required when servicing.

2. Return to **Main Menu Ident** with **ESC** or read off the type, firmware release, build number and serial number of the probe with ▶ or ▲ and then return to **Main Menu Ident** with ▶ or ▲.
3. Continue to **Main Menu Adjust** with ▶ or ▲ or return to Measuring Mode with **ESC**.

4.4.6.9. Editing Main Menu Adjust

A reference value can be entered for both relative humidity (RH) and temperature (°C/°F) for the 1-point adjustment. Please refer to the description in 1-point adjustment (offset - humidity/temperature), page 51

Reference values for pressure can be entered for the n-point adjustment. Please refer to the description in n-point adjustment (pressure), page 56

Find Quality Products Online at: Valuetesters.com info@valuetesters.com

In addition, the analog outputs can be adjusted. Also see Analog output adjustment, page 55 for instructions on how to do this.

> The 2-point adjustment cannot be performed via the user menu. This is done using the adjustment buttons or the P2A software, see 2-point adjustment (humidity/temperature), page 53 or volume 2, 2-point adjustment, page 154

Enter reference value for 1-point adjustment

Please also refer to 1-point adjustment (offset - humidity/temperature), page 51

1. In the Measuring Mode press **SET**, select main menu **Adjust** with ▶ or ▲ and confirm selection with **SET**.

- **Reference value % RH** is displayed.

2. Press **SET**, edit value: Scroll one digit to the right using ▶ and increase value of digit by 1 using ▲. Confirm with **SET** or abort entry with **ESC**.
3. Continue to **Reference value temp** with ▶ or ▲.
4. Press **SET**, **Reference value °C** or **Reference value °F** is displayed.
5. Press **SET**, edit value: Scroll one digit to the right using ▶ and increase value of digit by 1 using ▲. Confirm with **SET** or abort entry with **ESC**.
6. Continue to **Analog Adj. Ch. 1** with ▶ or ▲.
7. Continue with the adjustment of the analog outputs (see below, step 2) or press **ESC** to return to main menu **Adjust**.
8. Continue to main menu **Reset** with ▶ or ▲ or return to Measuring Mode with **ESC**.

Performing analog adjustment

Please refer to Analog output adjustment, page 55

1. In the Measuring Mode press **SET**, select main menu **Adjust** with ▶ or ▲ and confirm selection with **SET**.

> Each channel is adjusted at three points in the analog range (at 10 %; 50 %; 90°% of the analog scale).

2. Select **Analog Adj. Ch. 1** with ▶ or ▲ and confirm with **SET**.
3. Use ▶ or ▲ to select **Adj. Point 1**.
4. Press **SET**. Read off multimeter display (e.g. 5601 mA) and enter this value in the user menu. Do this by scrolling one digit

Find Quality Products Online at: Valuetesters.com info@valuetesters.com

to the right using ▶ and increasing the value of digit by 1 using ▲. Confirm with **SET** or abort entry with **ESC**.

5. Use ▶ or ▲ to select **Adj. Point 2**.
6. Press **SET**. Read off multimeter display (e.g. 12,001 mA) and enter this value in the user menu. Do this by scrolling one digit to the right using ▶ and increasing the value of digit by 1 using ▲. Confirm with **SET** or abort entry with **ESC**.
7. Use ▶ or ▲ to select **Adj. Point 3**.
8. Press **SET**. Read off multimeter display (e.g. 18,401 mA) and enter this value in the user menu. Do this by scrolling one digit to the right using ▲ and increasing the value of digit by 1 using ▶. Confirm with **SET** or abort entry with **ESC**.
9. With ▶ or ▲ continue to **Analog Adj. Ch. 2**or **3** (repeat steps 3 to 8).
10. Return to main menu **Adjust** with **ESC**.
11. Continue to main menu **Reset** with ▶ or ▲ or return to Measuring Mode with **ESC**.

Performing the pressure adjustment

Please refer to n-point adjustment (pressure), page 56

1. In the Measuring Mode press **SET**, select main menu **Adjust** with ▶ or ▲ and confirm selection with **SET**.

> ℹ The pressure adjustment can be performed at 3 to 6 adjustment points.

2. Select **Adjust Pressure** with ▶ or ▲ and confirm with **SET**.
3. Use ▶ or ▲ to select **Adj. Point 1**.
4. Press **SET**. Read off pressure sensor display (e.g. 30.1 Pa) and enter this value in the user menu. Do this by scrolling one digit to the right using ▶ and increasing the value of digit by 1 using ▲. Confirm with **SET** or abort entry with **ESC**.
5. Repeat steps 1 to 4 for adjustment points 2 to 6.
6. Return to main menu **Adjust** with **ESC**.
7. Continue to main menu **Reset** with ▶ or ▲ or return to Measuring Mode with **ESC**.

Find Quality Products Online at: Valuetesters.com info@valuetesters.com

4.4.6.10. Editing Reset main menu

You can reset the factory settings for the following:

- Instrument
- Sensor/probe
- Min./max. values

> Resetting to the factory settings means resetting to the order specification, i.e. the specific condition at the time of supply to the customer.

1. In the Measuring Mode press **SET**, select **Main Menu Reset** with ▶ or ▲ and confirm selection with **SET**.

- **Reset Device** to factory settings is displayed.

2. Select the setting to be reset using ▶ or ▲ and confirm selection with **SET**.

- **Reset Completed** is displayed.

3. Return to the reset setting with **ESC** or **SET** and return to **Main Menu Reset** with **ESC**.
4. Continue to **Main Menu Channel 1** with ▶ or ▲ or return to Measuring Mode with **ESC**.

4.5. Status, warning and error messages

To achieve optimum operational reliability (machine availability), the transmitter shows the following via the user menu or the P2A software

- Status messages
- Warning messages
- Error messages

The status and warning messages for the respective testo 6610 probes connected to the transmitter can be evaluated via the P2A software.

All messages are stored in the transmitter with an operating hours stamp. Use the user menu (see Editing Message main menu, page 75) or the P2A software (see volume 2, Transmitter history, page 157) to view the message history.

In the transmitter, the last 60 status messages and the last 120 error and warning messages are stored in a ring memory. There is no limit in the P2A software.

Find Quality Products Online at: Valuetesters.com info@valuetesters.com

4.5.1. Status messages

Status messages show the current operating status of the testo 6381.

Message	Display	Description
02506	Sensor initialization	Message appears while the transmitter is starting up. If the message disappears, the transmitter is ready for operation.
01D19	Service plug	The Mini-DIN socket is connected to: the USB adapter for P2A software, the adjustment adapter or the service plug (is not recorded/no number)
00300	New limit value	The limit value has been changed or shifted
00301	Scaling changed	The scaling has been changed
00500	Transmitter reset	The transmitter was reset to the factory settings and is restarted.
0052F	Reset Min/Max	Resets all saved Min/Max values for all channels
02518	Probe reset	Probe reset: The probe performs a reset
00503	Reset device to fact	A factory reset of the transmitter was performed
02503	Reset probe to fact	A factory reset of the probe was performed
00530	Change solenoid valve	The solenoid valve should be changed
00307	User Setting Change	User Setting Change: General settings were changed for the transmitter.
00117	Adjustment DeltaP	An n-point adjustment was performed.
02104	Analog adjustment	An analog adjustment has been made
02101	1-point adjustment	A 1-point adjustment is performed.

Find Quality Products Online at: Valuetesters.com info@valuetesters.com

Message	Display	Description
02102	2-point adjustment 11.3 %	As part of the 2-point adjustment, an adjustment is performed at 11.3 % RH
02103	2-point adjustment 75.3 %	As part of the 2-point adjustment, an adjustment is performed at 75.3 % RH
02105	Self-adjustment active	For testo 6615 probe only: The probe performs an automatic self-adjustment

4.5.2. Warning messages

Warning messages show an early warning or a current malfunction which may negatively impact measuring.

Message	Display	Cause	Remedying of fault
00809	Pressure too high**	The process pressure exceeds the pressure intended for the transmitter	Remove the transmitter from the process and take any necessary measures to lower the pressure
00E00	T ambient high**	The ambient temperature exceeds the permissible temperature for the transmitter	Take necessary measures to lower ambient temperature, e.g. through venting or cooling
00E01	T ambient low**	The ambient temperature is below the permissible temperature for the transmitter	Take necessary measures to raise ambient temperature, e.g. through heating
00E04/00E05	Supply voltage low**	The supply voltage is below the minimum voltage required for the transmitter	Take measures to ensure sufficient voltage supply
02822	T process high**	The process temperature exceeds the temperature designated for the probe	Remove the probe from the process and take any necessary measures to lower the process temperature

Find Quality Products Online at: Valuetesters.com info@valuetesters.com

Message	Display	Cause	Remedying of fault
02821	T process low**	The process temperature is below the temperature designated for the probe	Take necessary measures to raise process temperature
0081C	Alarm 1**	Depending on the parameterization of the relays	Depending on the parameterization of the relays
0081D	Alarm 2**	Depending on the parameterization of the relays	Depending on the parameterization of the relays
0081E	Alarm 3**	Depending on the parameterization of the relays	Depending on the parameterization of the relays
0081F	Alarm 4**	Depending on the parameterization of the relays	Depending on the parameterization of the relays
02900	2-point adjustment drift*	In the 2-point adjustment, corrections repeatedly occur in the same direction; this may indicate a sensor drift	Send the probe into Testo Service
02806	Condensation*	100 % RH has been reached, condensation developing	Take measures to reduce process humidity
02807	Values less than 0 % RH**	The adjustment or sensor is faulty	Check adjustment (via P2A adjustment history, perform 2-point adjustment where necessary). If the problem persists, contact Testo Service
02809	Sensor early warning*	For testo 6617 probe only: The cover electrode of the sensor is damaged; this may soon cause the sensor to break	Carry out visual inspection. If the mirror-like surface of the sensor is dirty or damaged, contact Testo Service

* Early warning

** Current malfunction

Find Quality Products Online at: Valuetesters.com info@valuetesters.com

4.5.3. Transmitter error messages

Error messages show a current malfunction.

Message	Display	Cause	Remedying of fault
03401	No probe signal	The probe communication is interrupted	Ensure that the probe connector is fully engaged in the transmitter. If communication still cannot be established, contact Testo Service
03508	Wrong probe	The connected probe is not compatible with the present transmitter	Use a compatible probe Note: Probe 661x for transmitter 638x
01505	Watchdog error	Due to a processor error, the transmitter performs an automatic restart	If the problem occurs frequently, contact Testo Service
0300A	% RH short-circuit	Short-circuit in humidity sensor	Contact Testo Service
0300B	% RH sensor broken	The humidity sensor is damaged (sensor broken)	Contact Testo Service
0300C	T short-circuit	Short-circuit in temperature sensor	Contact Testo Service
0300D	T sensor broken	The temperature sensor is damaged (sensor broken)	Contact Testo Service
03105	Self-adjustment error	For testo 6615 probe only: The automatic self-adjustment was faulty	Contact Testo Service
03106	Adjustment error	The adjustment of the probe was faulty	Contact Testo Service
01115	Low adjustment temperature	The ambient temperature is too low during the pressure adjustment	Take necessary measures to raise ambient temperature, e.g. through heating

Find Quality Products Online at: Valuetesters.com info@valuetesters.com

Message	Display	Cause	Remedying of fault
01116	High adjustment temperature	The ambient temperature is too high during the pressure adjustment	Take necessary measures to lower ambient temperature, e.g. through venting.
03000	Heat function defective	For testo 6614 probe only: Heat function defective	Contact Testo Service

4.5.4. Handling alarm messages

Shown on the display[7]	Can be used for collective alarm[8]	Additional message end[9]
New limit value	x	
Scaling changed	x	
Pressure too high	x	x
Delta p adjustment	x	
Alarm 1		x
Alarm 2		x
Alarm 3		x
Alarm 4		x
Transmitter reset	x	
Reset Min/Max		
Transmitter refresh	x	
User Setting Change		
Analog adjustment	x	

[7] If multiple messages/alarms are activated at the same time, only the last message/alarm is shown. If this is cancelled, the other messages that are still active are no longer displayed.

[8] The message can be assigned the collective alarm function, which means that the collective alarm is activated as soon as at least one of the messages assigned to it is activated. The collective alarm can be assigned to each of the 4 optional relays. The collective alarm is then always the same, as it can only be defined once.

[9] The message is shown upon the occurrence of the event causing the message as well as when closing. Two entries appear in the history in the P2A software: Message text_start and Message text_end.

Find Quality Products Online at: Valuetesters.com info@valuetesters.com

Shown on the display[7]	Can be used for collective alarm[8]	Additional message end[9]
1-point adjustment	x	
2-point adjustment 11.3%	x	
2-point adjustment 75.3 %	x	
Probe reset	x	
2-point adjustment drift	x	
T ambient high	x	x
T ambient low	x	x
Supply voltage low	x	x
T process high	x	x
T process low	x	x
Condensation	x	x
Values less than 0 % RH	x	x
Sensor early warning	x	
No probe signal	x	
Watchdog error	x	
% RH short-circuit	x	x
% RH sensor broken	x	x
T short-circuit	x	x
T sensor broken	x	x
Heat function defective	x	x

Perform the **Confirm message** function (acknowledgement of the alarm via the control keys on the transmitter):

- The message/alarm is no longer shown on the display and the optical alarm goes out, where applicable. If multiple messages/alarms are active at the same time, all are reset simultaneously.
- If at least one message is assigned to the collective alarm, the collective alarm is reset. If the collective alarm is set on a relay, the relay is also reset, meaning switched to its neutral position.

Find Quality Products Online at: Valuetesters.com info@valuetesters.com

4.5.5. Namur fault conditions

If the faults named in the following table occur, the analog outputs output special values that enable a general fault warning in the higher-level control system. The values correspond to the "Namur" industry standard.

Status message in the display	**Display value in display**	**Class**	**Analog output**				
			0 to 20 mA	**4 to 20 mA**	**1 V**	**5 V**	**10 V**
No probe signal	None	Error	21 mA	21 mA	1.1 V	5.5 V	11 V
Wrong probe	None	Error	21 mA	21 mA	1.1 V	5.5 V	11 V
Values < 0 %RH	uuuuu	Underrange	0 mA	3.8 mA	0 V	0 V	0 V
Condensation	ooooo	Overrange	20.5 mA	20.5 mA	1.1 V	5.5 V	11 V
% RH short-circuit	-----	Error	21 mA	21 mA	1.1 V	5.5 V	11 V
% RH sensor broken	-----	Error	21 mA	21 mA	1.1 V	5.5 V	11 V
T short-circuit	-----	Error	21 mA	21 mA	1.1 V	5.5 V	11 V
T sensor broken	-----	Error	21 mA	21 mA	1.1 V	5.5 V	11 V
T process low	uuuuu	Underrange	0 mA	3.8 mA	0 V	0 V	0 V
T process high	ooooo	Overrange	20.5 mA	20.5 mA	1.1 V	5.5 V	11 V
Probe disconnected	None	Error	21 mA	3.8 mA	1.1 V	5.5 V	11 V
Watchdog error	Previous value stops	Error	21 mA	3.8 mA	1.1 V	5.5 V	11 V
Value below min. scale	Reading	Underrange	0 mA	3.8 mA	0 V	0 V	0 V
Value above max. scale	Reading	Overrange	20.5 mA	20.5 mA	1.1 V	5.5 V	11 V
Pressure too high	ooooo	Overrange	20.5 mA	20.5 mA	1.1 V	5.5 V	11 V

Find Quality Products Online at: Valuetesters.com info@valuetesters.com

Status message in the display	Display value in display	Class	Analog output				
Heat function defective	-----	Error	21 mA	21 mA	1.1 V	5.5 V	11 V

4.6. Maintenance and cleaning

4.6.1. Maintaining the instrument

We recommend that the adjustment and settings of the transmitter be checked at regular intervals using the

- User menu (Operation, page 60) or
- P2A software (volume 2, Parameterizing, adjusting and analyzing software (P2A software), page 128)

Convenient "remote monitoring" of the transmitter can be implemented, for example by using a relay as a collective alarm (see Using alarm as collective alarm or not using it at all, page 68) whose messages are forwarded to a local alarm transmitter (horn, light) or PLC.

4.6.2. Cleaning the instrument

- Only clean the instrument carefully with a moist cloth.
- Do not use aggressive cleaning agents.
- Do not use any solvents.

Find Quality Products Online at: Valuetesters.com info@valuetesters.com