ASHCROFT®

PRESSURE GAUGE INSTALLATION, OPERATION AND MAINTENANCE

I&M008-10098-5/02 (250-1353-L) Rev. 12/15

Find Quality Products Online at: Valuetesters.com info@valuetesters.com

Find Quality Products Online at: Valuetesters.com info@valuetesters.com

CONTENTS

		Page
1.0	**Selection and Application**	
1.1	Range	4
1.2	Temperature	4
1.3	Media	4
1.4	Oxidizing media	4
1.5	Pulsation/Vibration	4
1.6	Gauge fills	4
1.7	Mounting	4
2.0	**Temperature**	
2.1	Ambient Temperature	4
2.2	Accuracy	4
2.3	Steam service	4
2.4	Hot or very cold media	4
2.5	Diaphragm seals	5
2.6	Autoclaving	5
3.0	**Installation**	
3.1	Installation Location	5
3.2	Gauge reuse	5
3.3	Tightening of gauge	5
3.4	Process isolation	5
3.5	Surface mounting	5
3.6	Flush mounting	5
4.0	**Operation**	
4.1	Frequency of inspection	5
4.2	In-service inspection	5
4.3	When to check accuracy	5
4.4	When to recalibrate	5
4.5	Other considerations	5
4.6	Spare parts	5
5.0	**Gauge Replacement**	5
6.0	**Accuracy: Procedures/Definitions**	6
6.1	Calibration - Rotary movement gauges	7
7.0	**Diaphragm Seals**	
7.1	General	8
7.2	Installation	8
7.3	Operation	8
7.4	Maintenance	8
7.5	Failures	8
8.0	**Dampening Devices**	
8.1	General	8
8.2	Throttle Screws & Plugs	8
8.3	Ashcroft Pulsation Dampener	8
8.4	Ashcroft Pressure Snubber	8
8.5	Ashcroft Needle Valves	8
8.6	Chemiquip® Pressure Limiting Valves	8
9.0	**Test Equipment & Tool Kits**	
9.1	Pressure Instrument Testing Equipment	9
9.2	Tools & Tool Kits	9
9.3	Kits to Convert a Dry Gauge to a Liquid Filled or Weather Proof Case Gauge	9
9.4	2½ & 3½ 1009 Duralife® Gauge Tools	10
Appendix		
	Type 1188 Bellows Gauge Calibration Procedure	11
	Type 1009 Calibration Procedure (Vacuum-Previous Style)	12
	Type 1009 Calibration Procedure (Pressure-Previous Style)	13
	Type 1009 Calibration Procedure (Pressure & Vacuum-Current Style)	14
	Type 1279 & 1379 I&M Liquid Fill Conversion Instruction	15-16
	Type 1082 Calibration Procedure	17-18

Cover photo courtesy of Johnson/Yokogawa Co.

Chemiquip® is a registered trademark of Chemiquip Products Co. Inc.

Find Quality Products Online at: Valuetesters.com **info@valuetesters.com**

1.0 SELECTION & APPLICATION

Users should become familiar with ASME B40.100 (Gauges – Pressure Indicating Dial Type – Elastic Element) before specifying pressure measuring gauges. That document – containing valuable information regarding gauge construction, accuracy, safety, selection and testing – may be ordered from:

ASME International

WARNING: To prevent misapplication, pressure gauges should be selected considering media and ambient operating conditions. Improper application can be detrimental to the gauge, causing failure and possible personal injury, property damage or death. The information contained in this manual is offered as a guide in making the proper selection of a pressure gauge. Additional information is available from Ashcroft Inc.

The following is a highlight of some of the more important considerations:

1.1 Range – The range of the instrument should be approximately twice the maximum operating pressure. Too low a range may result in (a) low fatigue life of the elastic element due to high operating stress and (b) susceptibility to overpressure set due to pressure transients that exceed the normal operating pressure. Too high a range may yield insufficient resolution for the application.

1.2 Temperature – Refer to Section 2 of this manual for important information concerning temperature related limitations of pressure gauges, both dry and liquid filled.

1.3 Media – The material of the process sensing element must be compatible with the process media. Use of a diaphragm seal with the gauge is recommended for process media that (a) is corrosive to the process sensing element; (b) contain heavy particulates (slurries) or (c) are very viscous including those that harden at room temperature.

1.4 Oxidizing media – Gauges for direct use on oxidizing media should be specially cleaned. Gauges for oxygen service should be ordered to variation X6B and will carry the ASME required dial marking "USE NO OIL" in red letters. Gauges for direct use on other oxidizing media may be ordered to variation X6W. They will be cleaned but carry no dial marking. *PLUS!*™ Performance gauges or Halocarbon filled gauge or diaphragm fill is required for use with oxidizing media; order variation XCF.

1.5 Pulsation/Vibration – Pressure pulsation can be dampened by several mechanisms; the patented *PLUS! Performance* gauge will handle the vast majority of applications. One exception to this is high frequency pulsation which is difficult to detect. The only indication may be an upscale zero shift due to movement wear. These applications should be addressed with a liquid filled gauge, or in extreme cases, a remotely mounted liquid filled gauge connected with a length of capillary line. The small diameter of the capillary provides excellent dampening, but can be plugged. The Ashcroft 1106 pulsation dampener and 1112 snubber are auxiliary devices which dampen pulsation with less tendency to plug.

1.6 Gauge fills. – Once it has been determined that a liquid filled gauge is in order, the next step is selecting the type of fill. **Glycerin** satisfies most applications. While being the least expensive fill, its usable temperature range is 20/180°F. **Silicone** filled gauges have a broader service range: –40/250°F. Oxidizing media require the use of **Halocarbon,** with a service range of –40/250°F. Pointer motion will be slowed at the low end of the low end of these temperature ranges.

1.7 Mounting – Users should predetermine how the gauge will be mounted in service: stem (pipe), wall (surface) or panel (flush). Ashcroft wall or panel mounting kits should be ordered with the gauge. See Section 3.

2.0 TEMPERATURE

2.1 Ambient Temperature – To ensure long life and accuracy, pressure gauges should preferably be used at an ambient temperature between –20 and +150°F (–30 to +65°C). At very low temperatures, standard gauges may exhibit slow pointer response. Above 150°F, the accuracy will be affected by approximately 1.5% per 100°F. Other than discoloration of the dial and hardening of the gasketing and degradation of accuracy, non-liquid filled Type 1279 (phenolic case) and 1379 (aluminum case) Duragauge® gauge, with standard glass windows, can withstand continuous operating temperatures up to 250°F. Unigauge models 2½″ and 3½″ 1009 and 1008S liquid filled gauges can withstand 200°F but glycerin fill and the acrylic window of Duragauge® gauges will tend to yellow. Silicone fill will have much less tendency to yellow. Low pressure, liquid filled Types 1008 and 1009 gauges may have some downscale errors caused by liquid fill expansion. This can be alleviated by venting the gauge at the top plug (pullout the blue plug insert). To do this the gauge must be installed in the vertical position.

Although the gauge may be destroyed and calibration lost, gauges can withstand short times at the following temperatures: gauges with all welded pressure boundary joints, 750°F (400°C); gauges with silver brazed joints, 450°F (232°C) and gauges with soft soldered joints, 250°F (121°C). For expected long term service below –20°F (–30°C) Duragauge® and 4½″ 1009 gauges should be hermetically sealed and specially lubricated; add "H" to the product code for hermetic sealing. Add variation XVY for special lubricant. Standard Duralife® gauges may be used to –50°F (–45°C) without modification.

2.2 Accuracy – Heat and cold affect accuracy of indication. A general rule of thumb for **dry gauges** is 0.5% of full scale change for every 40°F change from 75°F. Double that allowance for gauges with hermetically sealed or liquid filled cases, except for Duragauge® gauges where no extra allowance is required due to the elastomeric, compensating back. Above 250°F there may exist very significant errors in indication.

2.3 Steam service – In order to prevent live steam from entering the Bourdon tube, a siphon filled with water should be installed between the gauge and the process line. Siphons can be supplied with ratings up to 4,000 psi. If freezing of the condensate in the loop of the siphon is a possibility, a diaphragm seal should be used to isolate the gauge from the process steam. Siphons should also be used whenever condensing, hot vapors (not just steam) are present. Super heated steam should have enough piping or capillary line ahead of the siphon to maintain liquid water in the siphon loop.

2.4 Hot or very cold media – A five foot capillary line assembly will bring most hot or cold process media within the recommended gauge ambient temperature range. For media above

Find Quality Products Online at: Valuetesters.com info@valuetesters.com

750°F (400°C) the customers should use their own small diameter piping to avoid possible corrosion of the stainless steel. The five foot capillary will protect the gauges used on the common cryogenic (less than –300°F (200°C) gases, liquid argon, nitrogen, and oxygen.) The capillary and gauge must be cleaned for oxygen service. The media must not be corrosive to stainless steel, and must not plug the small bore of the capillary.

2.5 Diaphragm seals – A diaphragm seal should be used to protect gauges from corrosive media, or media that will plug the instrument. Diaphragm seals are offered in a wide variety of designs and corrosion resistant materials to accommodate almost any application and most connections.

2.6 Autoclaving – Sanitary gauges with clamp type connections are frequently steam sterilized in an autoclave. Gauges equipped with polysulfone windows will withstand more auto-clave cycles than those equipped with polycarbonate win-dows. Gauges equipped with plain glass or laminated safety glass **should not be autoclaved.** Gauge cases should be vented to atmosphere (removing the rubber fill/safety plug if necessary) **before** autoclaving to prevent the plastic window from cracking or excessively distorting. If the gauge is liquid filled, the fill should be drained from the case and the front ring loosened before autoclaving.

3.0 INSTALLATION

3.1 Location – Whenever possible, gauges should be located to minimize the effects of vibration, extreme ambient temperatures and moisture. Dry locations away from very high thermal sources (ovens, boilers etc.) are preferred. If the mechanical vibration level is extreme, the gauge should be remotely located (usually on a wall) and connected to the pressure source via flexible tubing.

3.2 Gauge reuse – ASME B40.100 recommends that gauges not be moved indiscriminately from one application to another. The cumulative number of pressure cycles on an in-service or previously used gauge is generally unknown, so it is generally safer to install a new gauge whenever and wherever possible. This will also minimize the possibility of a reaction with previous media.

3.3 Tightening of gauge – Torque should never be applied to the gauge case. Instead, an open end or adjustable wrench should always be used on the wrench flats of the gauge socket to tighten the gauge into the fitting or pipe. NPT threads require the use of a suitable thread sealant, such as pipe dope or teflon tape, and must be tightened very securely to ensure a leak tight seal.

Torque applied to a diaphragm seal or its [redacted]e, that tends to loosen one relative to the other, can cause loss of fill and subsequent inaccurate readings. Always apply torque **only** to the wrench flats on the lower seal housing when installing filled, diaphragm seal assemblies or removing same from process lines.

3.4 Process isolation – A shut-off valve should be installed between the gauge and the process in order to be able to isolate the gauge for inspection or replacement without shutting down the process.

3.5 Surface mounting – Also known as wall mounting. Gauges should be kept free of piping strains. The gauge case mounting feet, if applicable, will ensure clearance between the pressure relieving back and the mounting surface.

3.6 Flush mounting – Also known as panel mounting.

4.0 OPERATION

4.1 Frequency of inspection – This is quite subjective and depends upon the severity of the service and how critical the accuracy of the indicated pressure is. For example, a monthly inspection frequency may be in order for critical, severe service applications. Annual inspections, or even less frequent schedules, are often employed in non-critical applications.

4.2 In-service inspection – If the accuracy of the gauge cannot be checked in place, the user can at least look for (a) erratic or random pointer motion; (b) readings that are suspect – especially indications of pressure when the user believes the true pressure is 0 psig. Any gauge which is obviously not working or indicating erroneously, should be immediately valved-off or removed from service to avoid a possible pressure boundary failure.

4.3 When to check accuracy – Any suspicious behavior of the gauge pointer warrants that a full accuracy check be performed. Even if the gauge is not showing any symptoms of abnormal performance, the user may want to establish a frequency of bench type inspection.

4.4 When to recalibrate – This depends on the criticality of the application. If the accuracy of a 3-2-3% commercial type gauge is only 0.5% beyond specification, the user must decide whether it's worth the time and expense to bring the gauge back into specification. Conversely if the accuracy of a 0.25% test gauge is found to be 0.1% out of specification then the gauge should be recalibrated.

4.5 Other considerations – These include (a) bent or unattached pointers due to extreme pressure pulsation; (b) broken windows which should be replaced to keep dirt out of the internals; (c) leakage of gauge fill; (d) case damage – dents and/or cracks; (e) any signs of service media leakage through the gauge including its connection; (f) discoloration of gauge fill that impedes readability.

4.6 Spare parts – As a general rule it is recommended that the user maintain in inventory one complete Ashcroft® instrument for every ten (or fraction thereof) of that instrument type in service.

5.0 GAUGE REPLACEMENT

It is recommended that the user stock one complete Ashcroft® instrument for every ten (or fraction thereof) of that instrument type in service. With regard to gauges having a service history, consideration should be given to discarding rather than repairing them. Gauges in this category include the following:

a. Gauges that exhibit a span shift greater than 10%. It is possible the Bourdon tube has suffered thinning of its walls by corrosion.

b. Gauges that exhibit a zero shift greater than 25%. It is likely the Bourdon tube has seen significant overpressure leaving residual stresses that may be detrimental to the application.

c. Gauges which have accumulated over 1,000,000 pressure cycles with significant pointer excursion.

d. Gauges showing any signs of corrosion and/or leakage of the pressure system.

e. Gauges which have been exposed to high temperature or exhibit signs of having been exposed to high temperature – specifically 250°F or greater for soft soldered systems; 450°F or greater for brazed systems; and 750°F or greater for welded systems.

Find Quality Products Online at: Valuetesters.com **info@valuetesters.com**

f. Gauges showing significant friction error and/or wear of the movement and linkage.

g. Gauges having damaged sockets, especially damaged threads.

h. Liquid filled gauges showing loss of case fill.

NOTE: ASME B40.100 does not recommend moving gauges from one application to another. This policy is prudent in that it encourages the user to procure a new gauge, properly tailored by specification, to each application that arises.

6.0 ACCURACY: PROCEDURES/DEFINITIONS

Accuracy inspection – Readings at approximately five points equally spaced over the dial should be taken, both upscale and downscale, before and after lightly rapping the gauge to remove friction. **A pressure standard with accuracy at least four times greater than the accuracy of the gauge being tested is recommended.**

Equipment – A finely regulated pressure supply will be required. It is critical that the piping system associated with the test setup be leaktight. The gauge under test should be positioned as it will be in service to eliminate positional errors due to gravity.

Method – ASME B40.100 recommends that **known** pressure (based on the reading from the pressure standard used) be applied to the gauge under test. Readings including any error from the nominal input pressure, are then taken from the gauge under test. The practice of aligning the pointer of the gauge under test with a dial graduation and then reading the error from the master gauge ("reverse reading") can result in inconsistent and misleading data and should NOT be used.

Calibration chart – After recording all of the readings it is necessary to calculate the errors associated with each test point using the following formula: ERROR in percent = 100 times (TRUE VALUE minus READING) ÷ RANGE. Plotting the individual errors (Figure 1) makes it possible to visualize the total gauge characteristic. The plot should contain all four curves: upscale – before rap; upscale – after rap; downscale – before rap; downscale – after rap. "*Rap*" means lightly tapping the gauge **before** reading to remove friction as described in ASME B40.100.

Referring to Figure 1, several classes of error may be seen:

Zero – An error which is approximately equal over the entire scale. This error can be manifested when either the gauge is

FIG. 1

TYPICAL CALIBRATION CHART

INDICATED VALUE (PSI)

True Value – PSI	Increasing – Without RAP	Increasing – With RAP	Decreasing – Without RAP	Decreasing – With RAP
0	–.4	0	–.4	0
40	+.8	+1.0	+1.4	+1.1
80	+.4	+.5	+1.2	+1.0
120	–.4	–1.0	+.8	+.6
160	–.8	–.5	+.6	+.4
200	+.4	+.8	+.4	+.4

ERROR (% OF FULL SCALE)

True Value – % of Range	Increasing – Without RAP	Increasing – With RAP	Decreasing – Without RAP	Decreasing – With RAP
0	–.20	0	–.20	0
20	+.40	+.50	+.70	+.55
40	+.20	+.25	+.60	+.50
60	–.20	–.05	+.40	+.30
80	–.40	–.25	+.30	+.20
100	+.20	+.40	+.20	+.20

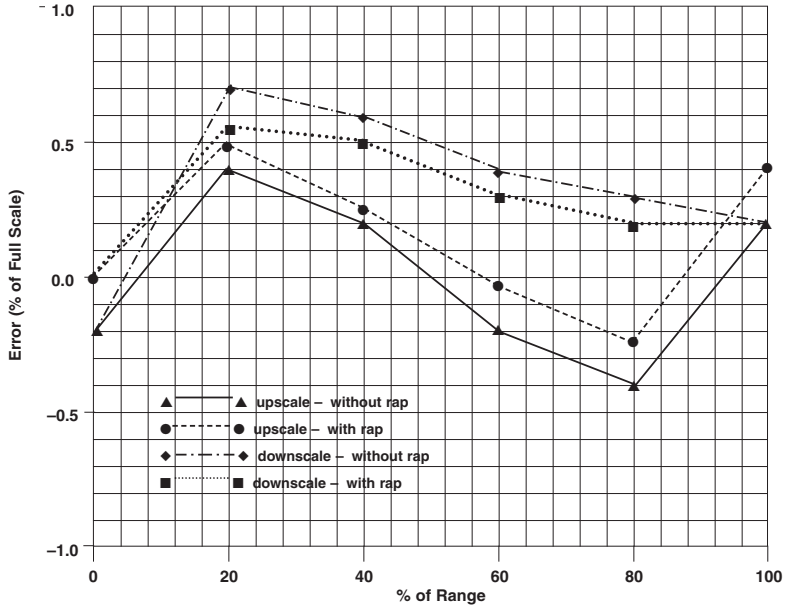

Find Quality Products Online at: Valuetesters.com info@valuetesters.com

dropped or overpressured and the Bourdon tube takes a permanent set. This error may often be corrected by simply repositioning the pointer. Except for test gauges, it is recommended that the pointer be set at midscale pressure to "split" the errors.

Span – A span error exists when the error at full scale pressure is different from the error at zero pressure. This error is often proportional to the applied pressure. Most Ashcroft gauges are equipped with an internal, adjusting mechanism with which the user can correct any span errors which have developed in service.

Linearity – A gauge that has been properly spanned can still be out of specification at intermediate points if the response of the gauge as seen in Figure 1 (Typical Calibration Chart) is not linear. The Ashcroft Duragauge® pressure gauge is equipped with a rotary movement feature which permits the user to minimize this class of error. Other Ashcroft gauge designs (e.g., 1009 Duralife®) require that the dial be moved left or right prior to tightening the dial screws.

Hysteresis – Some Bourdon tubes have a material property known as hysteresis. This material characteristic results in differences between the upscale and downscale curves. This class of error can **not** be eliminated by adjusting the gauge movement or dial position.

Friction – This error is defined as the difference in readings before and after lightly tapping the gauge case at a check point. Possible causes of friction are burrs or foreign material in the movement gearing, "bound" linkages between the movement and the bourdon tube, or an improperly tensioned hairspring. If correcting these potential causes of friction does not eliminate excessive friction error, the movement should be replaced.

6.1 Calibration – Rotary Movement Gauges and Type 1259 Gauges – Inspect gauge for accuracy. Many times gauges are simply "off zero" and a simple pointer adjustment using the micrometer pointer is adequate. If inspection shows the gauge warrants recalibration to correct span and/or linearity errors, proceed as follows:

a. Remove ring, window and, if solid front case, the rear closure assembly.

b. Pressurize the gauge **once** to full scale and back to zero.

c. Refer to Figure 2 (Ashcroft System Assembly w/Rotary Gear Movement) for a view of a typical Ashcroft rotary system assembly with component parts identified. Refer to Figure 2A for link configuration of Type 1259 gauge.

FIG. 2 ASHCROFT SYSTEM ASSEMBLY W/ROTARY GEAR MOVEMENT

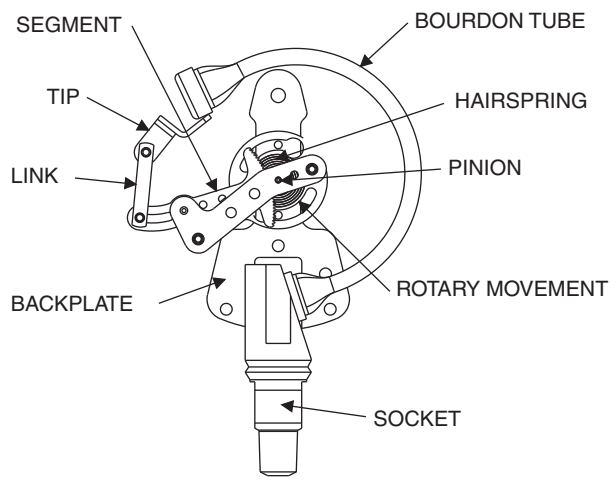

FIG. 2A ASHCROFT TYPE 1259 SYSTEM ASSEMBLY

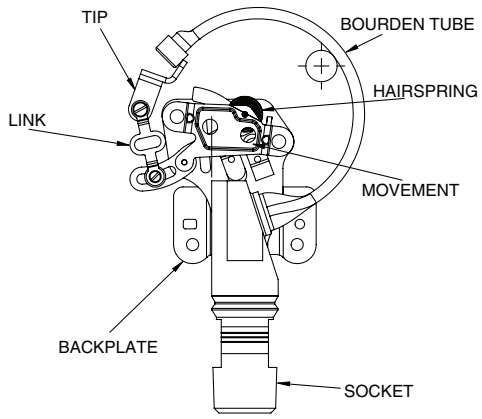

d. Adjust the micrometer pointer so that it rests at the true zero position. For open front gauges the pointer and dial must also be disassembled and the pointer should then be lightly pressed onto the pinion at the 9:00 o'clock position.

e. Apply full scale pressure and note the magnitude of the span error. With open front gauges, ideal span (270 degrees) will exist when at full scale pressure the pointer rests exactly at the 6:00 o'clock position.

f. If the span has shifted significantly (span error greater than 10%), the gauge should be replaced because there may be some partial corrosion inside the Bourdon tube which could lead to ultimate failure. If the span error exceeds 0.25%, loosen the lower link screw and move the lower end of the link toward the movement to increase span or away to decrease span. An adjustment of 0.004 inch will change the span by approximately 1%. This is a repetitive procedure which often requires more than one adjustment of the link position and the subsequent rechecking of the errors at zero and full scale pressure.

g. Apply midscale pressure and note error in reading. Even though the gauge is accurate at zero and full scale, it may be inaccurate at the midpoint. This is called linearity error. For corrections to linearity with the Type 1259 gauges refer to Figure 2B. For rotary movement gauges, note the following: if the error is positive, the movement should be rotated counter clockwise. Rotating the movement one degree will change this error by approximately 0.25%. Rotating the movement often affects span and it should be subsequently rechecked and readjusted if necessary according to step 6.1e and 6.1f.

FIG. 2B LINEARITY ADJUSTMENT & LINK CONFIGURATION FOR ASHCROFT TYPE 1259

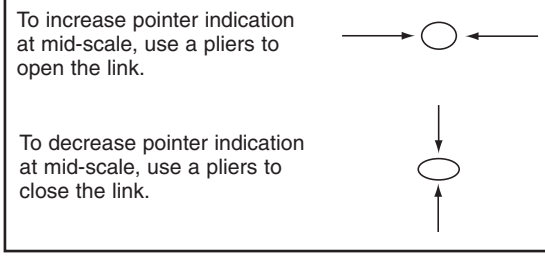

h. While recalibrating the gauge, the friction error – difference in readings taken with and without rap – should be

Find Quality Products Online at: Valuetesters.com info@valuetesters.com

noted. This error should not exceed the basic accuracy of the gauge. If the friction error is excessive, the movement should be replaced. One possible cause of excessive friction is improper adjustment of the hairspring. The hairspring torque,or tension, must be adequate without being excessive. The hairspring should also be level, unwind evenly (no turns rubbing) and it should never tangle.

NOTES:

1 For operation of test gauge external zero reset, refer to page 17.

2 For test gauge calibration procedure, refer to Figure 2 on page 18.

7.0 DIAPHRAGM SEALS

7.1 General – A diaphragm seal (isolator) is a device which is attached to the inlet connection of a pressure instrument to isolate its measuring element from the process media. The space between the diaphragm and the instrument's pressure sensing element is solidly filled with a suitable liquid. Displacement of the liquid fill in the pressure element, through movement of the diaphragm, transmits process pressure changes directly to a gauge, switch or any other pressure instrument. When diaphragm seals are used with pressure gauges, an additional 0.5% tolerance must be added to the gauge accuracy because of the diaphragm spring rate.

Used in a variety of process applications where corrosives, slurries or viscous fluids may be encountered, the diaphragm seal affords protection to the instrument where:

- The process fluid being measured would normally clog the pressure element.
- Pressure element materials capable of withstanding corrosive effects of certain fluids are not available.
- The process fluid might freeze due to changes in ambient temperature and damage the element.

7.2 Installation – Refer to bulletin OH-1 for information regarding (a) seal configurations; (b) filling fluids; (c) temperature range of filling fluids; (d) diaphragm material pressure and temperature limits; (e) bottom housing material pressure and temperature limits; (f) pressure rating of seal assembly; (g) accuracy/temperature errors of seal assembly; (h) diaphragm seal displacement. The volumetric displacement of the diaphragm must at least equal the volumetric displacement of the measuring element in the pressure instrument to which the seal is to be attached.

It is imperative that the pressure instrument/diaphragm seal assembly be **properly** filled prior to being placed in service. Ashcroft diaphragm seal assemblies should only be filled by a seal assembler certified by Ashcroft Inc. Refer to section 3.3 for a cautionary note about not applying torque on either the instrument or seal relative to the other.

7.3 Operation – All Ashcroft® diaphragm seals, with the exception of Type 310 mini-seals, are continuous duty. Should the pressure instrument fail, or be removed accidentally or deliberately, the diaphragm will seat against a matching surface preventing damage to the diaphragm or leakage of the process fluid.

7.4 Maintenance – Clamp type diaphragm seals – Types 100, 200 and 300 – allow for replacement of the diaphragm or diaphragm capsule, if that ever becomes necessary. The Type 200 top housing must also be replaced with the diaphragm. With all three types the clamping arrangement allows field disassembly to permit cleaning of the seal interior.

7.5 Failures – Diaphragm failures are generally caused by either corrosion, high temperatures or fill leakage. Process media build-up on the process side of the diaphragm can also require seal cleaning or replacement. Consult Customer Service, Stratford CT for advice on seal failures and/or replacement.

WARNING: All seal components should be selected considering process and ambient operating conditions to prevent misapplication. Improper application could result in failure, possible personal injury, property damage or death.

8.0 DAMPENING DEVICES

8.1 General – Some type of dampening device should be used whenever the pressure gauge may be exposed to repetitive pressure fluctuations that are fairly rapid, high in magnitude and especially when transitory pressure spikes exceeding the gauge range are present (as with starting and stopping action of valves and pumps). A restricted orifice of some kind is employed through which pressure fluctuations must pass before they reach the Bourdon tube. The dampener reduces the magnitude of the pressure pulse thus extending the life of the Bourdon tube and movement. This reduction of the pressure pulsation as "seen" by the pressure gauge is generally evidenced by a reduction in the pointer travel. If the orifice is very small the pointer may indicate the average service pressure, with little or no indication of the time varying component of the process pressure.

Commonly encountered media (e.g. – water and hydraulic oil) often carry impurities which can plug the orifice over time thus rendering the gauge inoperative until the dampener is cleaned or replaced.

Highly viscous media and media that tend to periodically harden (e.g., asphalt) require a diaphragm seal be fitted to the gauge. The seal contains an internal orifice which dampens the pressure fluctuation within the fill fluid.

8.2 Throttle Screws & Plugs – These accessories provide dampening for the least cost. They have the advantage of fitting completely within the gauge socket and come in three types: (a) a screwed-in type which permits easy removal for cleaning or replacement; (b) a pressed in, non-threaded design and (c) a pressed in, threaded design which provides a highly restrictive, helical flow path. Not all styles are available on all gauge types.

8.3 Ashcroft Pulsation Dampener – Type 1106 Ashcroft pulsation dampener is a moving pin type in which the restricted orifice is the clearance between the pin and any one of five preselected hole diameters. Unlike a simple throttle screw/plug, this device has a self-cleaning action in that the pin moves up and down under the influence of pressure fluctuations.

8.4 Ashcroft Pressure Snubber – The heart of the Type 1112 pressure snubber is a thick porous metal filter disc. The disc is available in four standard porosity grades.

8.5 Ashcroft Needle Valves – Type 7001 thru 7004 steel needle valves provide varying degrees of dampening. These devices, in the event of plugging, can easily be opened to allow the pressure fluid to clear away the obstruction.

8.6 Chemiquip® Pressure Limiting Valves – Model PLV-255, PLV-2550, PLV-5460, PLV-5500 and PLV-6430, available with and without built-in snubbers, automatically "shut off" at adjustable preset values of pressure to protect the gauge from damage to overpressure. They are especially useful on hydraulic systems wherein hydraulic transients

Find Quality Products Online at: Valuetesters.com **info@valuetesters.com**

(spikes) are common.

9.0 TEST EQUIPMENT & TOOL KITS

9.1 Pressure Instrument Testing

Equipment

Type 1305D Deadweight Tester

Type 1327D Pressure Gauge Comparator

Type 1327CM “Precision” Gauge Comparator

9.2 Tools & Tool Kits For Recalibration of 4½″ and Larger Gauges

Type 2505 universal carrying case for 1082 test gauge

Type 266A132-01 span wrench for 1082 test gauge

Type 1281 socket O-Ring kit for 1279/1379 lower connect

Type 1285 4½″ ring wrench for 1279/1379 lower & back connect

Type 1286 6″ ring wrench for 1379 lower & back connect

Type 3220 pointer puller (all gauges except 1009 Duralife®)

Type 3530 pinion back-up tool for 1009 Duralife®

Type 3220 Handjack set

Type 1105 Tool Kit

9.3 Kits to Convert a Dry Gauge to a Liquid Filled or Weather Proof Case Gauge

Type 1280 conversion kit for 4½″ lower connect 1279/1379

Type 1283 conversion kit for 4½″ back connect 1279/1379

Type 1284 conversion kit for 6″ lower & back connect

TYPE 1105
TOOL KIT

TYPE 3220
HAND JACK SET

Find Quality Products Online at: Valuetesters.com **info@valuetesters.com**

9.4 2½ & 3½ 1009 Duralife® Gauge Tools

Description	Part No.
Pointer Puller Screw/Pin(2)(3)(4)	112A381-01
Pointer Puller Body(2)(3)(4)	292A133-01
Pointer Staker(2)(4)	188A101-01
Span Wrench(2)(5) (to adjust span)	266A137-01
Ring Wrench 3½″(1)(5) (for ring removal) (35 1009)	266B134-01
Ring Wrench 2½″(1)(5) (for ring removal) (25 1009)	266B135-01
Nest 2½″ & 3½″(1)(5) (to hold gauge for ring removal) (25/35 1009)	266B136-01
Ring Removal Tool(6) (25 1009)	101B221-02
Ring Removal Tool(6) (35 1009)	101B221-01
Nest 2½″(6) (to hold gauge for ring removal) (25 1009)	101B220-02
Nest 3½″(6) (to hold gauge for ring removal) (35 1009)	101B220-01
Type 1230 throttle plug insertion (¼ NPT) for 1009 Duralife®)	1230
Type 1231 throttle plug insertion (½ NPT) for 1009 Duralife® (body only)	1231
Tool to open orifice on push-in throttle plug	101A206-01

(1) Formerly 1206T Tool Kit.
(2) Formerly some parts in 1205T Tool Kit.
(3) Both parts must be purchased together.
(4) Previous and current design.
(5) Previous design only.
(6) Current design only.

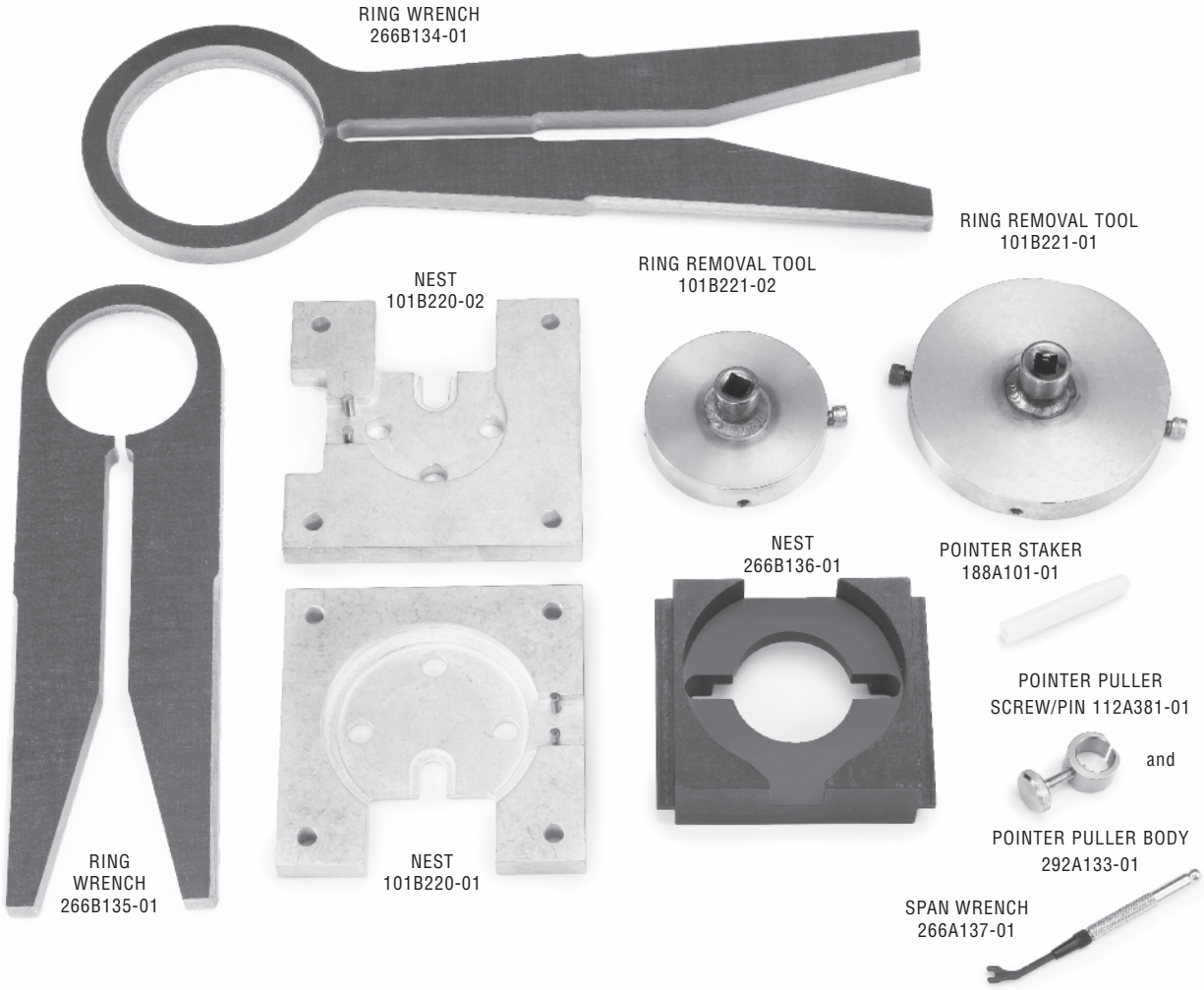

ASHCROFT® Type 1188 Bellows Gauge Calibration Procedure

ASHCROFT®

CALIBRATION & TROUBLE CORRECTION DIAGRAM

RANGE SPAN ADJUSTMENT

RANGE TOO SHORT
Adjust slide "S" inward

RANGE TOO LONG
Adjust slide "S" outward

NOTE: After adjusting range span, set both movement stops. Set the underload stop so that the pointer will stop at zero. Set the overload stop so that the pointer will pass the maximum range approximately 5˝.

After adjusting span re-zero pointer by removing from pinion and re-assembling at the proper dial mark.

POINTER JUMPING

STICKY PARTS
Clean all bearings and gear teeth

LOOSE HAIRSPRING
Remove backlash by disengaging pinion & rotate to tighten

COUNTER BALANCE RUBBING
Bend if necessary to clear socket in travel

SLUGGISH MOVEMENT

TIGHT HAIRSPRING
Loosen by disengaging pinion & rotate

NON LINEAR

NON LINEAR FIRST 3RD.

ADJ. ANGLE OF PULL BY INCREASING ANGLE "A"

NON LINEAR LAST 3RD.

ADJ. ANGLE OF PULL BY DECREASING ANGLE "A"

NOTE: To increase or decrease angle "A," bend tip inward or outward as required. Doing this may run the movement segment off the pinion. This can be corrected by cutting off one end off the link "E" decreasing its length, or makin a new length from .032 dia. phos. bronze wire.
Caution: When reproducing link end, follow figure 44 very closely. this will prevent too much play, or, binding in operation.

REF: Replacing System Bellows
After assembling bellows to the gauge socket securely, subject system to 30 psi for five minutes, allowing bellows to travel approximately 1/8˝ against the overload stop. After this, heat treat system for 15 hours at 250°F, this procedure is necssary to prevent gauge drift.

SLIDE AND LINK (angle "A")
Enlarged view of slide and link

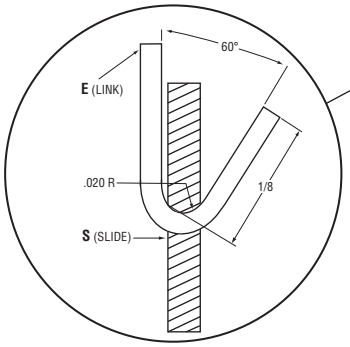

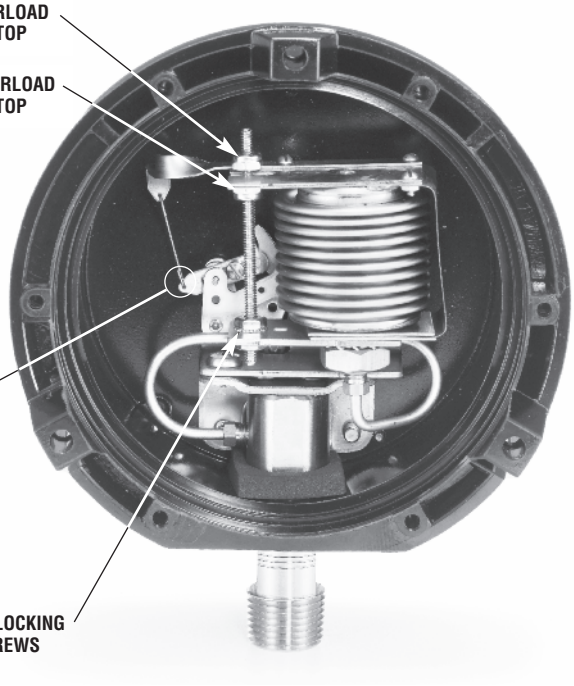

Find Quality Products Online at: Valuetesters.com info@valuetesters.com

ASHCROFT® Previous Type 1009 Duralife® Calibration Procedure – Vacuum Range

ASHCROFT®

1. Remove ring, window and gasket pointer.
2. Using a pencil, refer to dial and mark the 0 and 25″ Hg positions on the case flange.
3. Remove dial.
4. Apply 25″ Hg vac.
5. Lightly press pointer onto pinion carefully aligning it with the 25″ Hg vac. mark on the flange.
6. Release vacuum fully.
7. Note agreement of pointer to zero mark on flange.
8. If span is high or low, turn span block as shown in Figure 1.

Figure 1 –

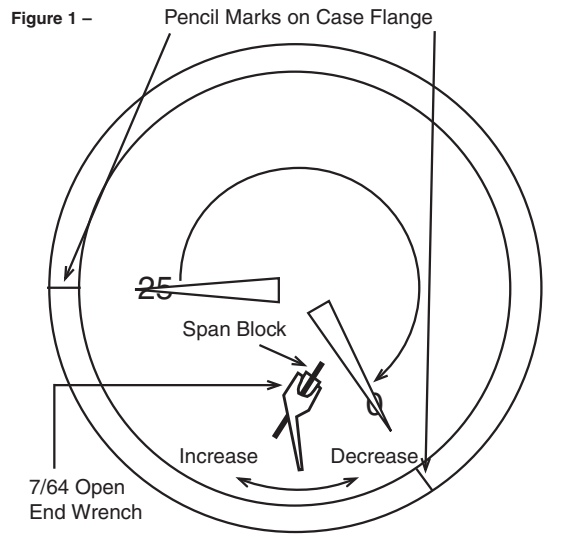

9. Repeat steps 4 through 8 until span is correct.
10. Remove pointer.
11. With 25″ Hg vac applied, reassemble dial, dial screws (finger tight) and point.
12. Apply 15″ Hg vac. and note accuracy of indication. If required, slide dial left or right to reduce error to 1% maximum.
13. Firmly tighten dial screws.
14. Firmly tap pointer onto pinion.
15. recheck accuracy at 15 and 25″ Hg vac. (Figure 2).
16. Reassemble window, gasket and ring.

Figure 2 –

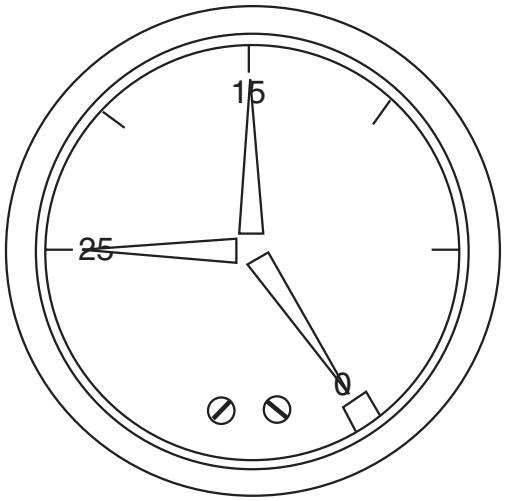

Notes: See page 10 for any tools required to calibrate.

For models produced prior to September 2008 for 2½″ version and December 2008 for 3½″ version.
Back of gauge will have a date code sticker.

Find Quality Products Online at: Valuetesters.com **info@valuetesters.com**

ASHCROFT® Previous Type 1009 Duralife® Calibration Procedure – Pressure Range

Step 1. With the dial off, install pointer at 9 o'clock "lightly," Figure 3.

Figure 3 –

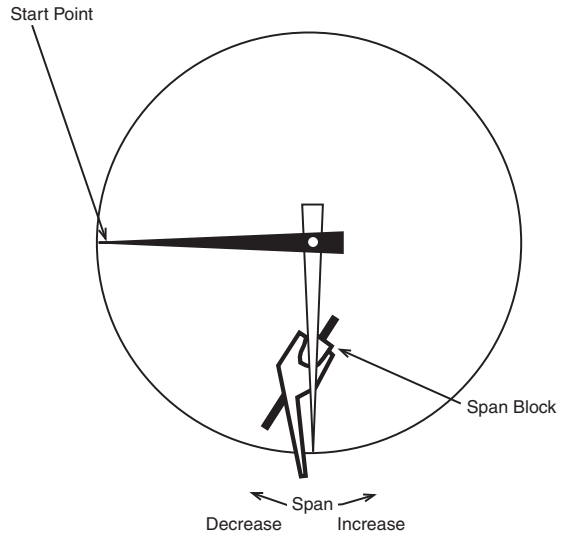

Step 2. Go to full scale pressure…rotate span block with tool until pointer rests at 6 o'clock.

Step 3. Go to zero pressure (9 o'clock)…if pointer has not moved away from start point, go to Step 4. If pointer has moved, repeat Step 1 until span is correct.

Step 4. Install dial with screws snug.

Figure 4 –

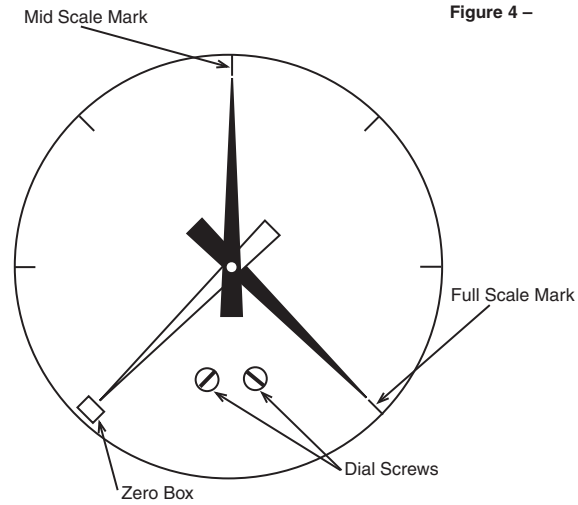

Step 5. Install pointer centered in zero box, Figure 4.

Step 6. Go to full scale pressure…check that pointer is within 1% of full scale mark. If not, remove pointer and dial and return to step 1, Figure 4.

Step 7. Go to mid-scale pressure…rotate dial until mid-scale mark is aligned with pointer, Figure 4.

Step 8. Tighten dials screws and stake on pointer.

Step 9. Check zero and full scale. Reassemble window, gasket and ring.

Notes: See page 10 for any tools required to calibrate.

For models produced prior to September 2008 for 2½″ version and December 2008 for 3½″ version.
Back of gauge will have a date code sticker.

All sales subject to standard terms and conditions of sale. I&M008-10077 9/01 AMR 05/10

Find Quality Products Online at: Valuetesters.com **info@valuetesters.com**

ASHCROFT® Current Type 1009 Duralife® Calibration Procedure – Pressure and Vacuum Range

Calibration – 1009 Duralife® Gauge –
Inspect gauge for accuracy. At times gauges are simply "off zero" and opening the ventable plug at the top of the gauge will relieve internal gauge pressure and correct the offset. If this is not adequate and inspection shows that the gauge warrants recalibration to correct zero, span and/or linearity errors, proceed as follows:

Remove ring, window, and gasket using Ashcroft Ring Removal Tools P/N 101B220-02 and 101B221-02 for 2½" gauges and 101B220-01 and 101B221-01 for 3½" gauges.

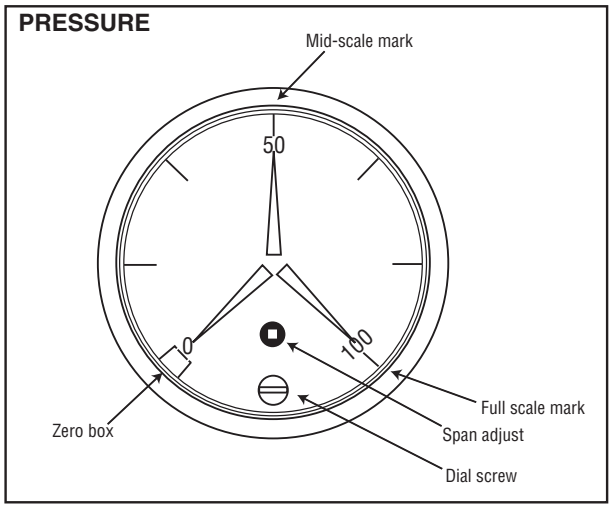

Positive Pressure Ranges –

1. Adjust pointer with a slotted screwdriver until it is in the center of the zero box. This is often all that is required it correct calibration issues.

2. Apply full scale pressure. If error exceeds 1% rotate the black span adjustment device with a #0 square drive bit. Clockwise increases span, counterclockwise decrease span.

3. Fully exhaust pressure and check that pointer still is still in the zero box. If not, repeat step 1 and 2

4. Once 0 and full scale are within tolerance, pressurize gauge to mid-scale.

5. If gauge is within 1%, calibration is complete. If not loosen the dial screw and rotate dial left or right to adjust midpoint. Retighten dial screw.

6. If an adjustment was made in step 5, recheck the gauge at zero and full scale, adjust accordingly until zero, mid and full scale points are in tolerance.

Vacuum Range –

1. Adjust pointer with a slotted screwdriver until it is in the center of the zero box. This is often all that is required it correct calibration issues.

2. Apply 25 inches Hg vacuum. If the error exceeds 1% adjust pointer with a slotted screwdriver until gauge is within tolerance.

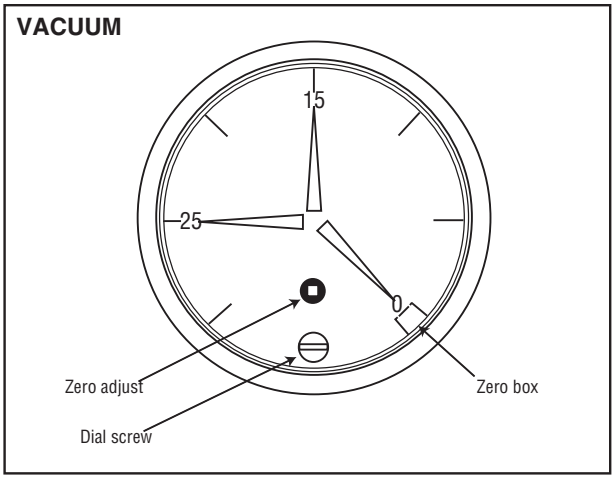

3. Vent to 0 pressure and check pointer position in the zero box. If error exceeds 1% rotate the black span adjustment device with a #0 square drive bit. Clockwise rotation moves pointer clockwise, counter-clockwise rotation moves the pointer counterclockwise.

4. Repeat step 1 and 2 until 0 and 25 inches of Hg are within gauge tolerance.

5. Apply 15 inches Hg vacuum. If gauge is within 1%, calibration is complete. If not loosen the dial screw and rotate dial left or right to adjust midpoint. Retighten dial screw.

6. If an adjustment was made in step 4, recheck the gauge at zero and 25 inches of Hg vacuum, adjust accordingly until zero, 15 and 25 inches Hg are in tolerance.

7. Continue below.

Re-assemble window and ring to gauge:

a. If plastic window is used, push window back into front of gauge, ensure the o-ring does not roll out of window groove (lubricate if necessary). Align the tabs of the window with the tabs of the case front. Once window is in place, install ring and tighten with tools referenced above and shown on page 10.

b If safety glass is used, reinstall window, gasket, and ring. Ensure that the gasket is seated properly under all four tabs of the ring and does not wrinkle when ring is tightened.

Note: Tighten ring: Apply 120-200inlb of torque. Rotate ring clockwise to tighten. Warning: over tightening of safety glass may induce cracking.

Notes: See page 10 for any tools required to calibrate.

For models produced after September 2008 for 2½˝ version and December 2008 for 3½˝ version.
Back of gauge will have a date code sticker.

All sales subject to standard terms and conditions of sale. I&M008-10081-05/10 AMR 05/10

Find Quality Products Online at: Valuetesters.com **info@valuetesters.com**

TYPE 1279 & 1379 SOLID FRONT DURAGAUGE® PRESSURE GAUGE CONVERSION INSTRUCTIONS TO:

- **Convert A Standard Dry Gauge To A Liquid Filled Gauge**
- **Convert A Standard Dry Gauge To A Dry, Weatherproof IP66 Gauge**

ASHCROFT®

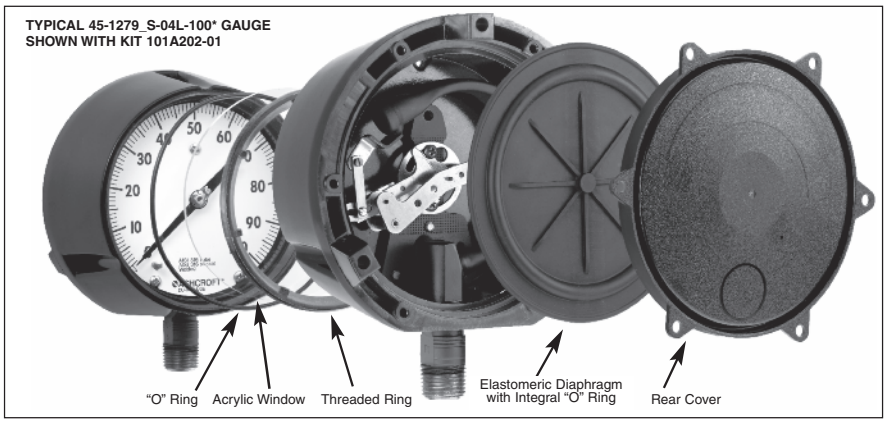

	1279		1379		
	4½˝ LOWER	4½˝ BACK	4½˝ LOWER	4½˝ BACK	6˝ LOWER & BACK
KIT PART NO.	101A202-01	101A203-01	1280	1283	1284
	QUANTITY INCLUDED				
ACRYLIC WINDOW	1	1	1	1	1
FRONT O-RING	1	1	1	1	1
DIAPHRAGM(1)	1	1	1	1	2(1-LC:1-BC)
REAR COVER	1	1	1	1	2(1-LC:1-BC)
COVER SCREWS	4	4	-	-	-
THROTTLE SCREWS	2	2	2	2	2
GARTER SPRING	–	1	1	1	1
FILL IDENTIFICATION	1	1	1	1	1
THREADED RING	–	–	1	1	1
TOP FILL PLUG	–	–	1	1	–

1. When Halocarbon fill is a requirement, rear case diaphragm bladder material is Viton instead of the standard Buna diaphragm bladder. Consult factory for part number.

TEMPERATURE LIMITS[1]				60 psi and Under Down Scale Zero Shift Required
	Ambient	Process	Storage	
Dry (IP66)	–20/200°F (–29/93°C)	–20/250°F(1) (–29/121°C)	–40/250°F (–40/121°C)	NONE
LF (glycerin)	20/150°F (7/66°C)	20/200°F (7/93°C)	0/150°F (–18/66°C)	NONE
(silicone)	–40/150°F (–40/66°C)	–40/200°F (–40/93°C)	–40/150°F (–40/66°C)	.12 psi
(halocarbon)	–40/150°F (–40/66°C)	–40/200°F (–40/93°C)	–40/150°F (–40/66°C)	.12 psi

Note: Other than discoloration of the dial and hardening of the gasketing that may occur as ambient or process temperatures exceeds 150°F, non-liquid-filled gauges with standard glass windows, can withstand continuous operating temperatures up to 250°F (121°C). Liquid-filled gauges can withstand 200°F (93°C) but glycerin fill and acrylic window will tend to yellow. Accuracy at temperatures above or below the reference ambient temperature of 68°F will be affected by approximately .4% per 25°F. Gauges with welded joints will withstand 750°F (450°F (232°C) with silver brazed joints) for short times without rupture, although other parts of the gauge will be destroyed and calibration will be lost. For continuous use and for process or ambient temperatures above 250°F (121°C), a diaphragm seal or capillary or siphon is recommended.

(1) Available for temperature below –20°F, see Production Information page ASH-PI-21B for details

1. Unscrew front threaded ring (turn CCW). Remove and discard glass window. For range spans 60 psi and under, shift pointer down scale by the amount shown in the table. With either the glass or plastic window, replace the O-ring with one furnished in the kit.
2. Remove protective paper from acrylic plastic window taking care not to scratch window. Assemble window in gauge.
3. Moisten face of threaded ring with silicone oil or silicone grease where ring bears up against window. Replace front threaded ring and tighten firmly hand tight. See instructions on reverse side for applying proper torque to ring to establish desired squeeze on O-ring seal. **(Fig. 4).**

   It is important to hold gauge **rigidly,** otherwise ring lugs may be damaged during removal or assembly process.
4. From rear of gauge, remove and discard these parts: rear cover and cover gaskets from case.
   Note: Disregard Step Nos. 5a and 5b if converting to hermetically sealed version.
   When converting a 45-1379 with the top fill hole configuration, p/n 256A176-01 fill plug is required and must be ordered separately.
5. **Filling Procedures:**
   a. **Manual Filling Procedure:** Place gauge face down on bench and **tip gauge** by blocking up front with a ⅜ inch block at the 12 o'clock dial position. Tipping of the gauge is necessary so fluid will flow into front cavity of the case. Pour in fill liquid to within about 1⁄16 inch of rear seal lip. When bubbles stop rising, front cavity is filled. Remove ⅜ inch block and pour in liquid until level is about 1⁄16 inch below rear sealing lip.
   Note: An alternative method of filling is to fill the front dial cavity, adding the front window, etc., as in Step No. 3. Then fill the rear of the gauge. This method eliminates the need to tip the gauge.
   b. **Vacuum Pump Fill Procedure:** (This procedure is recommended when filling a large number of gauges.) Place gauge face down and insert a ⅛ inch diameter tube, connected to a vacuum pump, through the 12 o'clock position hole in the rear, solid front portion of the case **(see Fig. 5).** Evacuate the air from the front dial cavity while pouring in the fill fluid through the case back. The vacuum will displace the air with fluid. When the dial cavity is solidly filled, remove the tubing and continue to pour the fill fluid to within 1⁄16 inch BELOW the O-ring channel lip.
   Pre-measuring fill amount is not necessary with above methods. For reference, amount of fill is approximately 400 ml. or 14 fluid oz. (4½˝ GA.) and 455 ml. or 16 fluid oz. (6˝ GA.).
   c. **Note:** The liquid fill level should be ⅜˝ (±⅛) as measured from the inside of the ring at the 12:00 o'clock position.
6. On lower connection gauges, assemble rear seal diaphragm to case.
   For back connection gauges see instructions on reverse side. **(Fig. 2/4).**
7. **For 1279:**
   Assemble rear cover and six self tapping screws in a criss-cross pattern and torque to 12 in lbs. (±2 in lbs.)
   For 1379:
   - Thread rear ring and torque to 200 in lbs
   - Install stainless steel back cover using two screws. Torque screws to 14 in lbs. (±2 in lbs.)
8. Assemble throttle screw to threaded hole in socket.
   Note: If system is monel (socket wrench flat stamped "PHS" or "PH") use monel throttle screw.
9. Check appropriate box on fill identification label, and peel off label back, and attach fill label to gauge case.
10. If gauge is to be repackaged:
    a. Include enclosed instruction sheet inside carton.
    b. Change type number on carton label to:
       (1) Hermetically Sealed – 1279(*)SH.
       (2) Liquid Filled – 1279(*)SL.
       *Bourdon Tube System Code

Glycerin or silicone should not be used in applications involving Oxygen, Chlorine, Nitric Acid, Hydrogen Peroxide or other strong oxidizing agents, because of danger of spontaneous chemical reaction, ignition or explosion. Halocarbon should be specified. Products with this fill can be ordered from factory.

The use of fluids other than those listed in the table above (for example, Hydrocarbon-based oils) may result in leakage caused by a reaction between the fluid and the elastomeric seals. Consult the factory before filling with any other fluid.

All sales subject to standard terms and conditions of sale. All rights reserved. I&M008-10090 (84B276) Rev 10/15

Find Quality Products Online at: Valuetesters.com info@valuetesters.com

TYPE 1279 & 1379 SOLID FRONT DURAGAUGE® PRESSURE GAUGE CONVERSION INSTRUCTIONS TO:

- **Convert A Standard Dry Gauge To A Liquid Filled Gauge**
- **Convert A Standard Dry Gauge To A Dry, Weatherproof IP66 Gauge**

ASHCROFT®

INSTRUCTIONS FOR USING CONE TOOL AND RING WRENCH

Garter Spring & Diaphragm Assembly (Back Connection Gauge Only)

A. Place cone tool over socket shank as shown.

B. Moisten lip of socket and outer O-ring surface with silicone oil or grease.

C. Place diaphragm with rib side facing upward over cone into case grove.
Diaphragm O-ring must be completely in socket-shank grove.

D. Place garter spring over cone as shown and slide onto diaphragm in socket grove

E. Assemble rear cover with screws per step 7.

Front Ring Assembly (All Gauges)

A. Assemble ring to case by hand to start.

B. Place ring on wrench as shown

C. Use ½″ drive extension and torque ring to 200 in. lb

Alternate Method

A. Tighten ring snugly by hand

B. Mark case and ring.

C. Turn ring another 100 to 120 degrees (slightly less than ½ turn) using the ring wrench and ½″ drive socket wrench or place the blunt end of a wooden or plastic dowel against a ring lug and tap with a hammer.

BACK CONNECTION ASSEMBLED GAUGE

Fig. 2

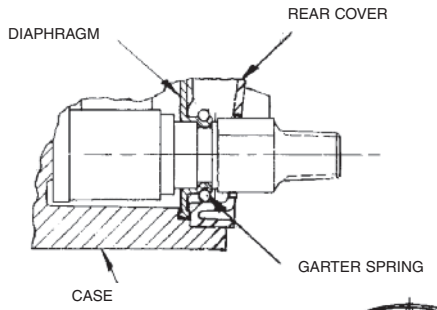

Fig. 3

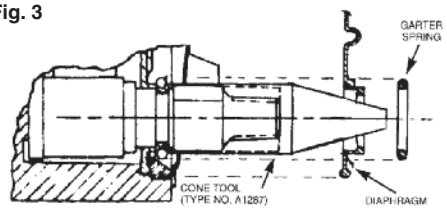

Fig. 4

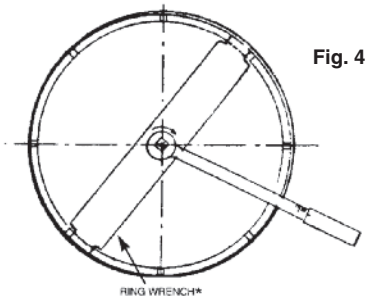

INSTRUCTIONS FOR LIQUID FILLING ASHCROFT® TYPE 1279 AND 1379 SOLID FRONT DURAGAUGE® PRESSURE GAUGES USING A VACUUM PUMP

A. Insert a length of ⅛″ diameter tubing through the 12 o'clock position hole in the rear, solid front portion of the case, as shown.

B. Evacuate the air from the front dial cavity while pouring in the fill fluid through the case back. The vacuum will displace the air with fluid.*

C. When the dial cavity is solidly filled, remove the tubing and continue to pour the fill fluid to within 1/16″ below the o-ring channel lip, as shown.

D. When converting a 45-1379 with the top fill hole configuration, p/n 256A176-01 fill plug is required and must be ordered separately.

*To prevent breakage, reduce vacuum to 15 in. Hg for plain glass and safety glass.

Fig. 5

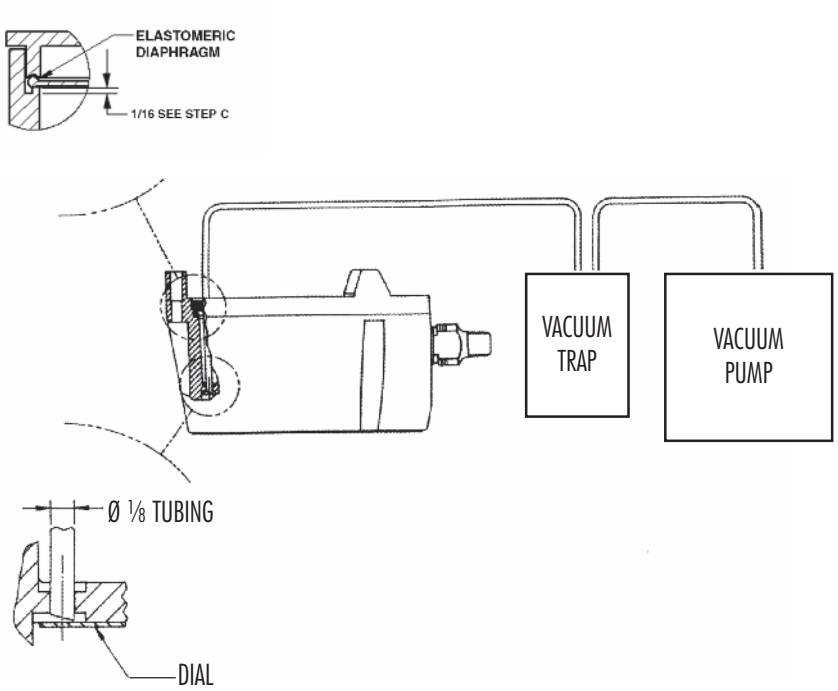

All sales subject to standard terms and conditions of sale. All rights reserved. I&M008-10090 (84B276) Rev 10/15

Find Quality Products Online at: Valuetesters.com **info@valuetesters.com**

INSTRUCTIONS FOR USE OF EXTERNAL EASY ZERO™ ADJUST FEATURE*

Fig. 1

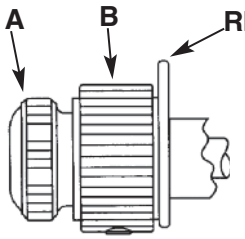

1. LOOSEN RING-LOCKING SCREW **A**.
2. OBTAIN REQUIRED ADJUSTMENT BY ROTATING KNOB **B** CLOCKWISE OR COUNTER-CLOCKWISE.
3. TIGHTEN SCREW **A** DOWN ON KNOB **B**.

*Applicable only for test gauge with hinged ring design.

ADDITIONAL CALIBRATION INSTRUCTIONS

1) "Standards shall have nominal errors no greater than ¼ of these permitted for the gauge being tested." *(Ref: ASME B40=100-1998)*

2) The instrument used as the calibration standard should have a maximum range no greater than 2x that of the gauge being tested. (i.e. Do not use a 400psi standard to test a 15psi gauge.)

3) "Known pressure shall be applied at each test point on increasing pressure (or vacuum) from one end to the other end of the scale. At each test point the gauge shall be . . .
lightly tapped, and then read . . ."
(*Ref: ASME B40.1 ¶ 6.2.4.1*)

4) To read gauge indication, move eye over red pointer tip at OD of printed dial until red reflection in mirror band is no longer visible, and then read the pointer position in reference to the dial.

Find Quality Products Online at: Valuetesters.com **info@valuetesters.com**

Fig. 2

THIS TEST GAUGE IS PROVIDED WITH A MICROSPAN™ ADJUSTMENT TO SIMPLIFY CALIBRATION. THE FLOW CHART BELOW OUTLINES THE RECOMMENDED CALIBRATION PROCEDURE

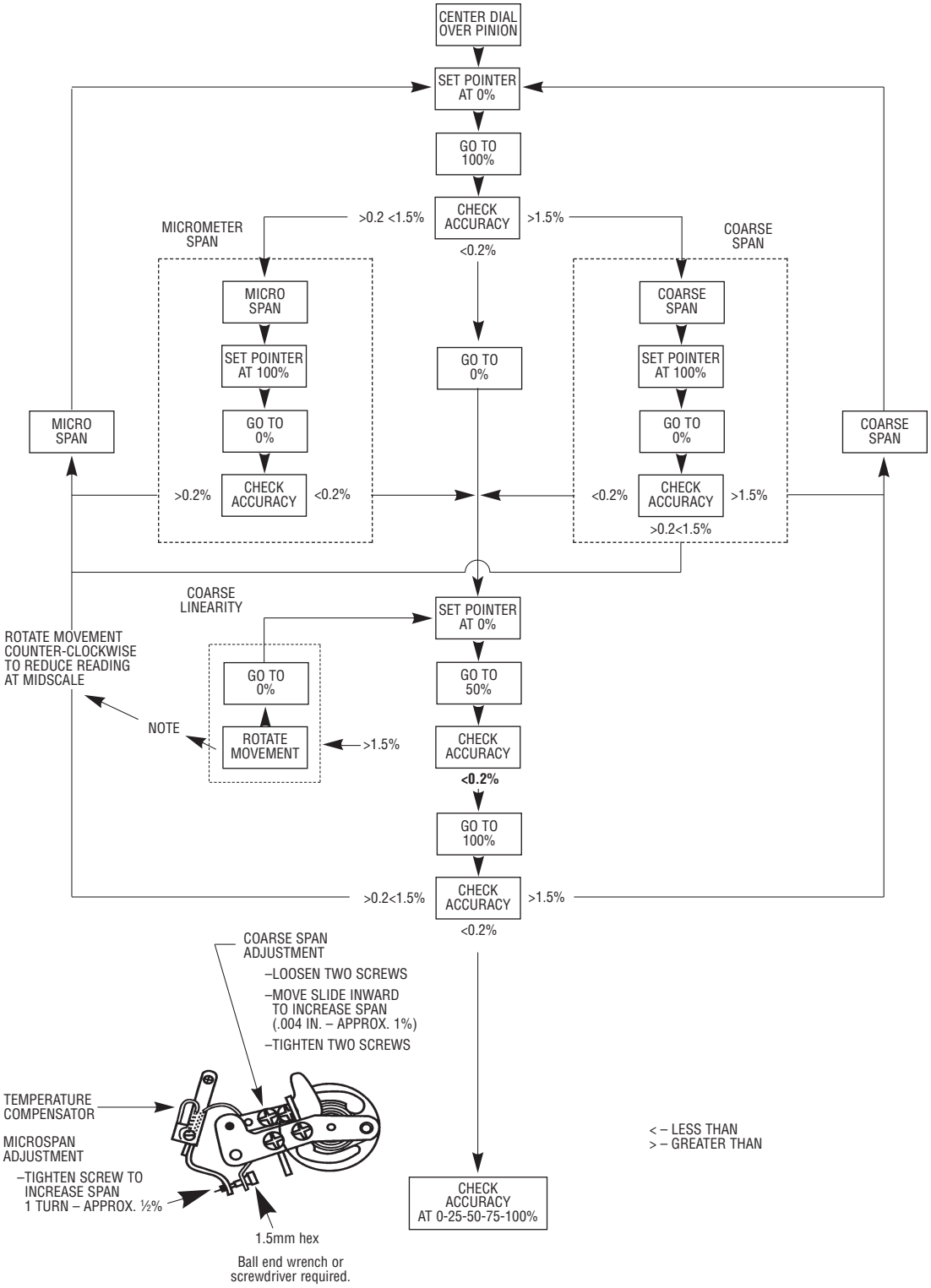

Find Quality Products Online at: Valuetesters.com **info@valuetesters.com**

Find Quality Products Online at: Valuetesters.com info@valuetesters.com

Find Quality Products Online at: Valuetesters.com info@valuetesters.com