RIDGID

# PEX Expander Manual

# RPE100 PEX Expander

Find Quality Products Online at: Valuetesters.com info@valuetesters.com

# Table of Contents

**Safety Symbols** ..... 2

**General Power Tool Safety Warnings**
- Work Area Safety ..... 2
- Electrical Safety ..... 2
- Personal Safety ..... 3
- Power Tool Use And Care ..... 3
- Battery Tool Use And Care ..... 4
- Service ..... 4

**Specific Safety Information**
- PEX Expander Safety ..... 4

**RIDGID® Contact Information** ..... 5

**Description** ..... 5

**Specifications** ..... 6
- Standard Equipment ..... 7

**Pre-Operation Inspection** ..... 7

**Set-Up and Operation** ..... 7
- Changing Belt Hook Sides ..... 7
- Changing Expander Head ..... 7
- Preparing Connections ..... 7
- Operation ..... 7
- Inspecting The Connection ..... 10

**Storage** ..... 10

**Maintenance Instructions**
- Cleaning And Lubrication ..... 10
- Troubleshooting ..... 11
- Service And Repair ..... 11

**Optional Equipment** ..... 12

**Disposal** ..... 12

**Electromagnetic Compatibility (EMC)** ..... 12

**Declaration of Conformity** ..... Inside Back Cover

**Lifetime Warranty** ..... Back Cover

Original Instructions - English



Find Quality Products Online at: Valuetesters.com info@valuetesters.com

# RPE100 PEX Expander

**⚠ WARNING!**

Read this Operator's Manual carefully before using this tool. Failure to understand and follow the contents of this manual may result in electrical shock, fire and/or serious personal injury.

RIDGID®

Find Quality Products Online at: Valuetesters.com info@valuetesters.com

# Safety Symbols

In this operator's manual and on the product, safety symbols and signal words are used to communicate important safety information. This section is provided to improve understanding of these signal words and symbols.

This is the safety alert symbol. It is used to alert you to potential personal injury hazards. Obey all safety messages that follow this symbol to avoid possible injury or death.

**DANGER** DANGER indicates a hazardous situation which, if not avoided, will result in death or serious injury.

**WARNING** WARNING indicates a hazardous situation which, if not avoided, could result in death or serious injury.

**CAUTION** CAUTION indicates a hazardous situation which, if not avoided, could result in minor or moderate injury.

**NOTICE** NOTICE indicates information that relates to the protection of property.

This symbol means read the operator's manual carefully before using the equipment. The operator's manual contains important information on the safe and proper operation of the equipment.

This is information symbol and indicates the product information available (including operators' manual) by scanning the adjacent QR code.

This symbol means always wear safety glasses with side shields or goggles while using this equipment to reduce the risk of injury.

USE RB-12XXX Series Li-Ion Only

This symbol indicates that RIDGID RB-12XXX series batteries (such as the RIDGID RB-1225R and RB-1225) can be used with this tool.

# General Power Tool Safety Warnings*

**WARNING**

**Read all safety warnings, instructions, illustrations and specifications provided with this power tool. Failure to follow all instructions listed below may result in electric shock, fire and/or serious injury.**

**SAVE ALL WARNINGS AND INSTRUCTIONS FOR FUTURE REFERENCE!**

The term "power tool" in the warnings refers to your mains-operated (corded) power tool or battery-operated (cordless) power tool.

## Work Area Safety

- **Keep work area clean and well lit.** Cluttered or dark areas invite accidents.
- **Do not operate power tools in explosive atmospheres, such as in the presence of flammable liquids, gases or dust.** Power tools create sparks which may ignite the dust or fumes.
- **Keep children and bystanders away while operating a power tool.** Distractions can cause you to lose control.

## Electrical Safety

- **Power tool plugs must match the outlet. Never modify the plug in any way. Do not use any adapter plugs with earthed (grounded) power tools.** Unmodified plugs and matching outlets will reduce risk of electric shock.
- **Avoid body contact with earthed or grounded surfaces, such as pipes, radiators, ranges and refrigerators.** There is an increased risk of electric shock if your body is earthed or grounded.
- **Do not expose power tools to rain or wet conditions.** Water entering a power tool will increase the risk of electric shock.
- **Do not abuse the cord. Never use the cord for carrying, pulling or unplugging the power tool. Keep cord away from heat, oil, sharp edges or moving parts.** Damaged or entangled cords increase the risk of electric shock.
- **When operating a power tool outdoors, use an extension cord suitable for out-**

* The text used in the general power tool safety warnings section of this manual is verbatim, as required, from the applicable UL/CSA/EN 62841-1 standard. This section contains general safety practices for many different types of power tools. Not every precaution applies to every tool, and some do not apply to this tool.



Find Quality Products Online at: Valuetesters.com info@valuetesters.com

**door use.** Use of a cord suitable for outdoor use reduces the risk of electric shock.

- **If operating a power tool in a damp location is unavoidable, use a Ground Fault Circuit Interrupter (GFCI) protected supply.** Use of a GFCI reduces the risk of electric shock.
- **If operating a power tool in a damp location is unavoidable, use a Residual Current Device (RCD) protected supply.** Use of a RCD reduces the risk of electric shock.
- **It is recommended that the tool always be supplied via a Residual Current Device having a residual current of 30mA or less.**

## Personal Safety

- **Stay alert, watch what you are doing and use common sense when operating a power tool. Do not use a power tool while you are tired or under the influence of drugs, alcohol or medication.** A moment of inattention while operating power tools may result in serious personal injury.
- **Use personal protective equipment. Always wear eye protection.** Protective equipment such as dust mask, non-skid safety shoes, hard hat, or hearing protection used for appropriate conditions will reduce personal injuries.
- **Prevent unintentional starting. Ensure the switch is in the OFF-position before connecting to power source and/or battery pack, picking up or carrying the tool.** Carrying power tools with your finger on the switch or energizing power tools that have the switch ON invites accidents.
- **Remove any adjusting key or wrench before turning the power tool ON.** A wrench or a key left attached to a rotating part of the power tool may result in personal injury.
- **Do not overreach. Keep proper footing and balance at all times.** This enables better control of the power tool in unexpected situations.
- **Dress properly. Do not wear loose clothing or jewelry. Keep your hair, clothing and gloves away from moving parts.** Loose clothes, jewelry or long hair can be caught in moving parts.
- **If devices are provided for the connection of dust extraction and collection facilities, ensure these are connected and properly used.** Use of dust collection can reduce dust-related hazards.
- **Do not let familiarity gained from frequent use of tools allow you to become complacent and ignore tool safety principles.** A careless action can cause severe injury within a fraction of a second.

## Power Tool Use And Care

- **Do not force the power tool. Use the correct power tool for your application.** The correct power tool will do the job better and safer at the rate for which it was designed.
- **Do not use the power tool if the switch does not turn it ON and OFF.** Any power tool that cannot be controlled with the switch is dangerous and must be repaired.
- **Disconnect the plug from the power source and/or remove the battery pack, if detachable, from the power tool before making any adjustments, changing accessories, or storing power tools.** Such preventive safety measures reduce the risk of starting the power tool accidentally.
- **Store idle power tools out of the reach of children and do not allow persons unfamiliar with the power tool or these instructions to operate the power tool.** Power tools are dangerous in the hands of untrained users.
- **Maintain power tools and accessories. Check for misalignment or binding of moving parts, breakage of parts and any other condition that may affect the power tool's operation. If damaged, have the power tool repaired before use.** Many accidents are caused by poorly maintained power tools.
- **Keep cutting tools sharp and clean.** Properly maintained cutting tools with sharp cutting edges are less likely to bind and are easier to control.
- **Use the power tool, accessories and tool bits etc. in accordance with these instructions, taking into account the working conditions and the work to be performed.** Use of the power tool for operations different from those intended could result in a hazardous situation.
- **Keep handles and grasping surfaces dry, clean and free from oil and grease.**



Find Quality Products Online at: Valuetesters.com info@valuetesters.com

Slippery handles and grasping surfaces do not allow for safe handling and control of the tool in unexpected situations.

## Battery Tool Use And Care

- **Recharge only with the charger specified by the manufacturer.** A charger that is suitable for one type of battery pack may create a risk of fire when used with another battery pack.
- **Use power tools only with specifically designated battery packs.** Use of any other battery packs may create a risk of injury and fire.
- **When battery pack is not in use, keep it away from other metal objects, like paper clips, coins, keys, nails, screws or other small metal objects that can make a connection from one terminal to another.** Shorting the battery terminals together may cause burns or a fire.
- **Under abusive conditions, liquid may be ejected from the battery; avoid contact. If contact accidentally occurs, flush with water. If liquid contacts eyes, additionally seek medical help.** Liquid ejected from the battery may cause irritation or burns.
- **Do not use a battery pack or tool that is damaged or modified.** Damaged or modified batteries may exhibit unpredictable behavior resulting in fire, explosion or risk of injury.
- **Do not expose a battery pack or tool to fire or excessive temperature.** Exposure to fire or temperature above 265°F (130°C) may cause explosion.
- **Follow all charging instructions and do not charge the battery pack or tool outside the temperature range specified in the instructions.** Charging improperly or at temperatures outside the specified range may damage the battery and increase the risk of fire.

## Service

- **Have your power tool serviced by a qualified repair person using only identical replacement parts.** This will ensure that the safety of the power tool is maintained.
- **Never service damaged battery packs.** Service of battery packs should only be performed by the manufacturer or authorized service providers.

# Specific Safety Information

**⚠ WARNING**

**This section contains important safety information that is specific to this tool.**

**Read these precautions carefully before using the PEX Expander to reduce the risk of electrical shock, or other serious injury.**

**SAVE ALL WARNINGS AND INSTRUCTIONS FOR FUTURE REFERENCE!**

A compartment in the tool carrying case is included to keep this manual with the tool for use by the operator.

## PEX Expander Safety

- **Keep your fingers away from expander head/tubing end during operation.** Your fingers can be pinched, crushed, fractured or amputated in the expander head or between the expander head and other objects (such as the tool, workpiece and surroundings).
- **One person must control work process and tool operation.** To reduce the risk of injury, only the operator should be in the area when the tool is running.
- **Only use with PEX-a tubing.** Use with other materials increases the risk of damaged tubing, ejected material, and a leaking connection.
- **Use proper tool, expander head, tubing and fitting combinations.** Use of other expander heads may increase the risk of leaks, damage the tool/expander head and/or cause personal injury.
- **Only use RIDGID® PEX Expander with appropriate RIDGID or RIDGID approved expander heads.** Use of other expansion heads may increase the risk of leaks, damage the tool/expander head and/or cause serious personal injury.
- **Wear appropriate protective equipment, including eye protection when handling and using tool.**
- **Always maintain control of the tool.** Use care when using the belt hook and make sure tool is secure. Dropped and falling tools can cause striking and falling injuries.
- **Keep expander head on the tool to protect the expander cone from dirt and**



Find Quality Products Online at: Valuetesters.com info@valuetesters.com

**damage.** This also reduces the risk of injury from the expander cone tip.

- **Do not modify tool.** Modifying the tool in any manner may result in personal injury and voidance of the tool's warranty.
- **Before operating a RIDGID® PEX Expander, read and understand:**
  - This operator's manual
  - The battery/charger manual
  - The system manufacturer's installation instructions
  - The instructions for any other equipment or material used with this tool

  Failure to follow all instructions and warnings may result in property damage and/or serious injury.

## RIDGID Contact Information

If you have any question concerning this RIDGID® product:

- Contact your local RIDGID® distributor.
- Visit RIDGID.com to find your local RIDGID® contact point.
- Contact Ridge Tool Technical Service Department at ProToolsTechService@Emerson.com or in the U.S. and Canada call 844-789-8665.

## Description

The RIDGID® RPE100 PEX Expander is designed to expand PEX-a tubing for joints in ASTM F1960 type systems. An individual RIDGID expander head is required for each specific size tubing.

When operated, an internal electric motor powers a cam, moving the expander cone forward and applying force to specially designed expander heads.

The tool is equipped with a tool light that turns on with the first press/release of the trigger. When the tool light is illuminated, the tool is powered up and any subsequent activation of the trigger will cycle the tool. Tool will stay powered up and ready to use for 2 minutes. If the light turns OFF, the switch will need to be pressed twice to allow tool to run.

The tool is equipped with an Auto Rotate feature that slightly rotates the expansion head each time it cycles. This reduces the risk of grip marks inside the tube aligning and allowing a leak path.

The tool has home position feature, which ensures the expander head is in fully retracted position after releasing the trigger switch.

The tool comes with belt hook that can be attached on either side and used to hang the tool.

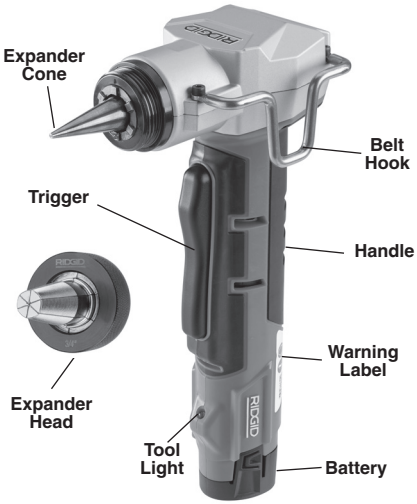


**Figure 1A – RIDGID PEX Expander**

**Figure 1B – RIDGID PEX Expander**



Find Quality Products Online at: Valuetesters.com info@valuetesters.com

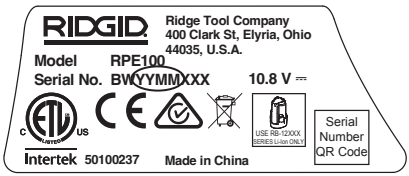


**Figure 2 – Machine Serial Number - Circled digits indicate the year and month of the manufacture. (YY = year, MM = month)**

# Specifications

For use with appropriate size PEX-a tubing, appropriate RIDGID Expansion Head and ASTM F1960 compliant cold expansion fittings with PEX Reinforcing Rings (Inch sizes)

Capacity ..... Up to 1" (25mm) with Proper RIDGID Expander Heads

Available RIDGID Expander Heads..... 3/8", 1/2", 5/8", 3/4" 1", 16mm, 20mm and 25mm

Power Supply .... 12V Li-ion Rechargeable Battery Pack (RIDGID RB-1200 Series)

Operating Temperature Range..... 14 ° F to 104° F (-10° C to 40° C)

Storage Temperature ..... -4 °F to 113°F (-20 °C to 45 °C)

Weight (no battery/1" (25mm) Expander Head) ..... 4.8 lbs. (2.2kg)

Dimensions (no battery/1" (25mm) Expander Head) ..... 11.2" x 7.7" x 3.8" (285mm x 196mm x 97mm)

Sound Pressure ($L_{PA}$)* ..... 78.0 dB(A), K=3 dB(A)

Sound Power ($L_{PW}$)* ..... 86.0 dB(A), K=3 dB(A)

Vibration ($a_h$)* .... 4.3 m/ $s^2$

* Sound and Vibration measurements are measured in accordance with a standardized test per Standard EN 62481-1.
- Vibration levels may be used for comparison with other tools and for preliminary assessment of exposure.
- Sound and vibration emissions may vary due to your location and specific use of these tools.
- Daily exposure levels for sound and vibration need to be evaluated for each application and appropriate safety measures taken when needed. Evaluation of exposure levels should consider the time a tool is switched OFF and not in use. This may significantly reduce the exposure level over the total working period.

**All specifications are nominal and may change as design improvements occur.**

| User Action | Tool light | Tool Status |
|---|---|---|
| None | OFF | Tool is powered OFF. |
| 1st trigger pull<br>Single press/release of trigger | ON | Tool is powered ON and can now be used. Tool will stay powered up and ready to use for 2 minutes. |
| 2nd trigger pull (within 2 min) | ON | Tool is operating |
| none - for > 2 min | OFF | The tool will power down until the trigger is pressed to power up the tool again. |
| Trigger pull | OFF | Battery low. Recharge battery/Insert fully charged battery. |
| | Flashing Slow | Tool is out of temperature limit. Allow the tool to cool down. Confirm proper set-up and restart use. |
| | Flashing Fast | Tool has malfunctioned and will not operate. Remove battery and allow machine to rest, then reinsert battery. If light still Flashing Fast, have tool serviced. |

**Figure 3 – Tool Light Status**



Find Quality Products Online at: Valuetesters.com info@valuetesters.com

## Standard Equipment

*Refer to the RIDGID catalog* for details on equipment supplied with specific tool catalog numbers.

Selection of appropriate materials and joining methods is the responsibility of the system designer and/or installer. Before any installation is attempted, careful evaluation of the specific service environment, including chemical environment and service temperature, should be completed. Consider appropriate applicable building code and standards requirements. Consult PEX System manufacturer for selection information.

Contact the PEX System manufacturer for specific information on their system, including materials, installation instructions, seal material, inspection, testing, etc. Incorrect installation can cause system leaks and extensive property damage.

# Pre-Operation Inspection

**⚠ WARNING**

**Daily before use, inspect your PEX Expander and correct any problems to reduce the risk of serious injury from electric shock, pinching injures, attachment failure and other causes, and prevent tool damage.**

1. Remove battery from tool.
2. Clean any oil, grease or dirt from the equipment, especially the handles and controls. This aids inspection and helps to prevent the tool or controls from slipping from your grip.
3. Inspect the tool for:
   - Proper assembly, maintenance and completeness.
   - Any broken, worn, missing, misaligned or binding parts.
   - Confirm that the trigger moves freely and does not bind or stick.
   - Confirm that the belt hook is secure.
   - Presence and readability of warning label *(Figure 1)*.
   - Any other condition which may prevent safe and normal operation.

   Do not use the tool until problems have been repaired.
4. Inspect the expander head and cone. Confirm that RIDGID and size markings are clear and readable on the expander head. Remove the expander head and clean if necessary. Cone and mating surface of expander head should be smooth and clean with no damage. Ridges in expander head should be clean. Lubricate between cone and mating surface of expander head. *See Maintenance section.*
5. Inspect and maintain any other equipment being used per its instructions to make sure it is functioning properly.

# Set-Up and Operation

**⚠ WARNING**

**Keep your fingers away from expander head/tubing end during operation. Your fingers can be pinched, crushed, fractured or amputated in the expander head or between the expander head and other objects (such as the tool, workpiece and surroundings).**

**One person must control work process and tool operation. To reduce the risk of injury, only the operator should be in the area when the tool is running.**

**Follow Set-up and Operation to reduce the risk of injury from crushing and other causes and to prevent tool damage.**

1. Confirm appropriate work area *(See General Power Tool Safety Warnings).* Operate in a clear, level, stable, dry location. Do not use tool while standing in water.
2. Inspect the work to be done and determine the correct RIDGID equipment for the application per their specifications. Using incorrect equipment for an application can cause injury, damage the tool and make incomplete connections.
3. Confirm all equipment has been inspected and set up as directed in their instructions.

## Changing Belt Hook Sides

The Belt Hook can be attached to either side of the tool, or it can be removed from the tool.

1. Remove battery from tool.
2. Unscrew the two screws to move or remove the belt hook from housing. Make



Find Quality Products Online at: Valuetesters.com info@valuetesters.com

sure that the screws are secured before using the tool.

When using the belt hook, always maintain control of the tool. Use care when using the belt hook and make sure tool is secure. Dropped and falling tools can cause striking and falling injuries.

## Changing Expander Head

1. Remove battery from tool.
2. Select proper expander head for the tubing.
3. Properly clean and lubricate the expander cone *(see Maintenance section)*.
4. Place the expander head over the expander cone. Securely tighten the collar of the expander head to the tool. The expander head must fit snuggly against the shoulder of the tool. Do not overtighten. If the expander head is not fully seated on the tool the Auto rotate feature may not work, and the tube end may not be fully expanded.
5. To remove, unscrew the expander head from the expander cone.

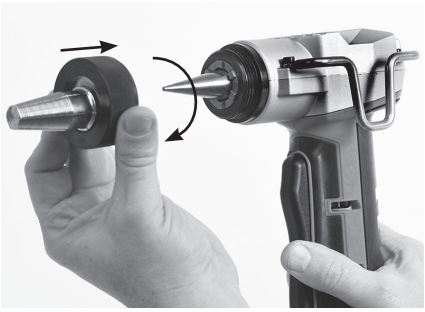

**Figure 4 – Installing Expander Head**

## Preparing Connection

**NOTICE** These instructions are generalized practices. Always follow the fitting system manufacturer's specific installation instructions to reduce the risk of improper press connections and extensive property damage.

1. Prepare the connection according to the fitting system manufacturer's instructions. The tubing end should be cut cleanly and squarely. Fully insert the tubing into the reinforcing ring until it butts against the ring stop. If the ring does not have a stop, ring should be flush up to 1/16" (1.6 mm) with the tube end, *see Figure 5.* There may be requirements on ambient and tubing/fitting temperatures that need to be followed.

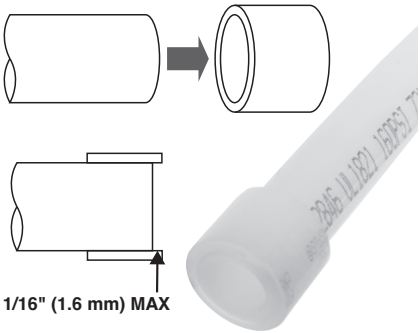


**Figure 5 – Inserting Tubing Into The Reinforcing Ring**

2. With dry hands, insert a fully charged battery into tool.
3. After inserting the battery, the tool will not be ON until the trigger is pressed and released to power up the tool. When powered up the LED tool light will turn ON. The tool can now be used.

   After 120 sec of no operation, the tool will power down until the trigger is pressed to power up the tool again. The tool is powered down if the LED tool light is OFF. The power up trigger press will not activate the tool; another trigger press is required to start the tool cycle.
4. Hold the tube to be expanded at least 3" (75 mm) from the end. With the other hand, insert the expander head into the tubing as far as it will go *(Figure 7A)*.

## Operation

1. If the tool light is OFF, power up the tool by depressing and releasing the trigger one time. The tool is now ready to use.
2. Press the trigger, the expander head will repeatedly cycle to expand and retract. Each time the head retracts, push the head further into the tube end. Continue to cycle the tool until the tube end is flush with the expander head shoulder and complete *(See Figure 7B)*.

   *Figure 6* gives the approximate number of expansion cycles for complete expansion for each PEX tubing size. The number of expansion cycles depends on a variety of



Find Quality Products Online at: Valuetesters.com info@valuetesters.com

conditions including temperature, colder temperatures require fewer expansions.

If the expander head/tool pushes out of the tube end and will not fully expand the tube, confirm that the tube end is clean and dry, make sure there is no lubricant on the expander head or the ID of the tube, and confirm that the expander head is not damaged.

When used with RIDGID expander heads, the tool will rotate the expander head slightly after each cycle. This changes the orientation of the expansion head segments and the marks they make on the inside of the tubing, reducing the risk of leaking connections.

| PEX Tubing Size | Approx. Number of Expansion Cycles |
|---|---|
| 3/8" | 6-7 |
| 1/2" | 7-8 |
| 5/8" | 9-10 |
| 3/4" | 11-12 |
| 1" | 17-18 |
| 16mm | 6-10 |
| 20mm | 7-12 |
| 25mm | 12-18 |

**Figure 6 – Approximate Tool Cycles for Complete Expansion**

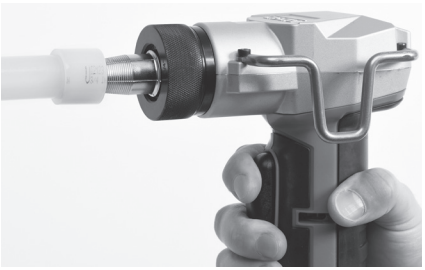

**Figure 7A – Starting Expansion of Tube**

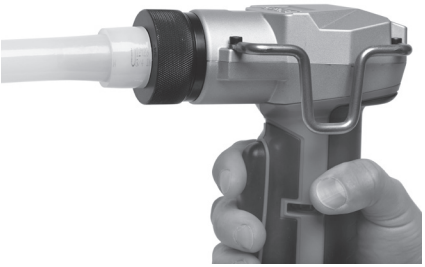

**Figure 7B – Tube Expansion Complete, Tube End Flush With Expander Head Shoulder**

3. Release the trigger. The home position feature will stop the tool when the expander head is in fully retracted position.
4. Remove the tool from the tubing. Do not continue to cycle the expander head in tubing to avoid over expansion of tube – Over expansion of the tube will increase the time for the tube to shrink around the fitting and seal.
5. Working quickly, visually check the inside of the expanded tube end. Confirm that there is no dirt, debris or head lubricant in the tube. If needed, wipe the inside of the tube out. Inspect the expansion markings inside the tube end. The markings should overlap *(see Figure 8)* reducing the likelihood of potential leak paths.

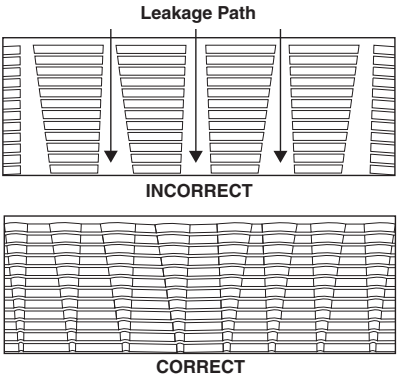


**Figure 8 – Expansion Markings (Inside Expanded Tubing End)**

6. Insert fitting into the tubing until the fitting shoulder is flush with the tube end, *see Figure 9.* The tube end will be contracting and may be tight on the fitting.

   If the fitting is not going in all the way, remove the fitting and re-expand the tube end.

   If the fitting is not going in all the way or if more than 1/16" (1.6 mm) gap between tubing and fitting shoulder, cut 2" (50 mm) off the end of the tubing and re-expand the tube end with a new ring.



Find Quality Products Online at: Valuetesters.com info@valuetesters.com

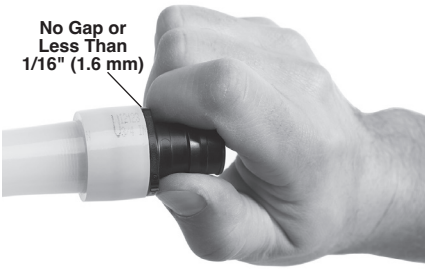


**Figure 9 – Inserting Fitting into the Tubing**

7. When operation is complete, remove battery from tool.

## Inspecting The Connection

1. Inspect the expanded tubing per the fitting system manufacturer instructions. Make sure that the fitting is fully inserted and flush to the tubing end. Confirm that the ring is properly positioned over the tube end.

   If any issues are found, remove fitting and create a new connection.
2. Test the connection in accordance with fitting system manufacturer instructions, normal practice and applicable codes.
3. Flush the system before use following general good practices to remove any traces of expansion head lubricant.

# Storage

**WARNING** Remove battery from the PEX Expander. Keep an expander head on the tool to protect the expander cone from dirt and damage. Store the tool, expander heads and battery in case. Store tool in a dry, secured, locked area that is out of reach of children and people unfamiliar with the tool.

# Maintenance Instructions

**WARNING**

**Make sure the battery is removed from tool before performing maintenance or making any adjustment.**

## Cleaning And Lubrication

Wipe the tool clean daily with a clean dry cloth.

**Cleaning Expander Heads** – Clean any buildup of dirt and lubricant from the expander head, including between segments and inside surfaces. Soak in a degreasing agent to remove grease from between segments. Use a dry, clean cloth to wipe dirt away.

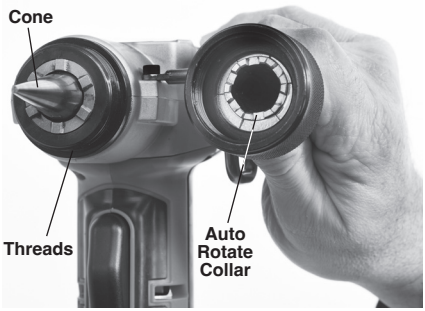

**Figure 10 – Cleaning The Expander Head**

**Cleaning The Expander Cone** – with the expander head removed, use a dry, clean cloth to wipe any dirt and debris from the cone, auto rotate collar and threads.

**Lubrication** – The expander cone should be lubricated every time the expander head is changed and daily at a minimum. Apply a light coat of RIDGID PEX Expander Lubricant (Catalog# 81008) to the clean expander cone. Install the clean expander head. Cycle the tool several times to distribute the lubricant. Wipe any remaining lubricant off of the exposed surfaces of the expander head.

**NOTICE** Excessive lubrication may leave lubricant in the tube resulting in improper connections. No lubricant should be on the portions of the expander head that contact the inside of the tubing.



Find Quality Products Online at: Valuetesters.com info@valuetesters.com

## Troubleshooting

| PROBLEM | POSSIBLE REASON | SOLUTION |
|---|---|---|
| **Tool will not turn ON when trigger is pressed.** | Battery is completely discharged or battery has failed. | Insert fully charged battery/replace battery. |
| | Battery not properly inserted into handle of tool. | Check to assure battery is fully inserted. |
| **The expander head segments fail to contract between expansions.** | Debris between expander head and expander cone. | Clean the expander head and expander cone, *see Maintenance Instructions.* |
| | The expander cone lack grease. | Lubricate the expander cone, *see Maintenance Instructions.* |
| **Expander head/tool pushes out of the tube end and not expand the tube.** | Tube end not clean or grease on expander head. | Confirm that the tube end is clean and dry, make sure there is no lubricant on the expander head or the ID of the tube. |
| **The connections produced are not complete.** | Used wrong expander head for the tube size. | Install the correct expander head. |
| | Expansion markings inside tube are not correct. | Redo the tube expansion per instructions. |
| | Tool is in need of repair. | Have tool serviced. |
| **The tool does not come to home position after releasing trigger switch.** | The home position hall sensor Malfunction. The tool is still functional. | Have tool serviced. |
| **The fittings will not seal.** | The expander head is not screwed tightly. | Securely tighten the expander head to the tool. |
| | The expander head segments are bent or misaligned. | Replace the expander head. |
| | The fitting is damaged. | Replace fitting. |

*See Figure 3 for Tool Light Status.*

## Service And Repair

**⚠ WARNING**

**Improper service or repair can make machine unsafe to operate.**

Service and repair on the PEX Expander must be performed by a RIDGID Authorized Independent Service Center.

For information on your nearest RIDGID Authorized Independent Service Center or any service or repair questions *see Contact Information* section in this manual.

# Optional Equipment

**⚠ WARNING**

**To reduce the risk of serious injury, only use equipment specifically designed and recommended for use with the PEX Expander, such as listed.**

| Catalog No. | Description |
|---|---|
| 80713 | 3/8" RIDGID PEX Expander Head |
| 80723 | 1/2" PEX Expander Head |
| 80733 | 5/8" RIDGID PEX Expander Head |
| 80743 | 3/4" PEX Expander Head |
| 80753 | 1" PEX Expander Head |
| 70433 | 16 x 1.5-2.2mm RIDGID PEX Expander Head |
| 71503 | 20 x 1.9-2.3mm RIDGID PEX Expander Head |
| 70963 | 20 x 2.8mm RIDGID PEX Expander Head |
| 71508 | 25 x 2.3mm RIDGID PEX Expander Head |
| 71023 | 25 x 3.5mm RIDGID PEX Expander Head |
| 81008 | PEX Expander Lubricant |
| 80783 | Carry Case |



Find Quality Products Online at: Valuetesters.com info@valuetesters.com

### Battery Pack

| Catalog No. | Description | Capacity |
|---|---|---|
| 55183 | RB-1225R | 12V 2.5Ah Li-Ion |

Battery will work with any catalog number RBC-121 Battery Charger.

### Chargers and Cords

| Catalog No. | Description | Region | Plug Type |
|---|---|---|---|
| 55193 | Charger | USA, Canada and Mexico | A |
| 55198 | Charger | Europe | C |
| 55203 | Charger | China | A |
| 55208 | Charger | Australia & Latin America | I |
| 55213 | Charger | Japan | A |
| 55218 | Charger | United Kingdom | G |
| 44798 | Charger Cord | North America | A |
| 44808 | Charger Cord | Europe | C |
| 44803 | Charger Cord | China | A |
| 44813 | Charger Cord | Australia & LA | I |
| 44818 | Charger Cord | Japan | A |
| 44828 | Charger Cord | United Kingdom | G |

For a complete listing of RIDGID® equipment available for this tool, *see the Ridge Tool Catalog online at RIDGID.com or see Contact Information.*

## Disposal

The tool and any applicable batteries, accessories and packaging should be recycled in an environmentally appropriate manner. There are companies that specialize in recycling that may be found locally. Dispose of in compliance with all applicable regulations. Contact your local waste management authority for more information.

Do not dispose of electrical equipment and batteries with household waste!

**For EC Countries:** According to the European Guideline 2012/19/EU for Waste Electrical and Electronic Equipment and its implementation into national legislation, electrical equipment that is no longer usable, and, according to Regulation (EU) 2023/1542, batteries that are no longer usable must be collected separately and disposed of in an environmentally correct manner.

## Electromagnetic Compatibility (EMC)

The term electromagnetic compatibility is taken to mean the capability of the product to function smoothly in an environment where electromagnetic radiation and electrostatic discharges are present and without causing electromagnetic interference to other equipment.

**NOTICE** This tool conform to all applicable EMC standards. However, the possibility of them causing interference in other devices cannot be precluded. All EMC related standards that have been tested are called out in the tool's technical document.



Find Quality Products Online at: Valuetesters.com info@valuetesters.com

**What is covered**
RIDGID® tools are warranted to be free of defects in workmanship and material.

**How long coverage lasts**
This warranty lasts for the lifetime of the RIDGID® tool. Warranty coverage ends when the product becomes unusable for reasons other than defects in workmanship or material.

**How you can get service**
To obtain the benefit of this warranty, deliver via prepaid transportation the complete product to RIDGID® c/o Emerson Professional Tools, LLC in, Elyria, Ohio, or any RIDGID® AUTHORIZED INDEPENDENT SERVICE CENTER. Pipe wrenches and other hand tools should be returned to the place of purchase.

**What we will do to correct problems**
Warranted products will be repaired or replaced, at RIDGID's option, and returned at no charge; or, if after three attempts to repair or replace during the warranty period the product is still defective, you can elect to receive a full refund of your purchase price.

**What is not covered**
Failures due to misuse, abuse or normal wear and tear are not covered by this warranty. Seller is not responsible for any incidental or consequential damages.

**How local law relates to the warranty**
Some states do not allow the exclusion or limitation of incidental or consequential damages, so the above limitation or exclusion may not apply to you. This warranty gives you specific rights, and you may also have other rights, which vary, from state to state, province to province, or country to country.

**No other express warranty applies**
This FULL LIFETIME WARRANTY is the sole and exclusive warranty for RIDGID® products. No employee, agent, dealer, or other person is authorized to alter this warranty or make any other warranty on behalf of RIDGID®.

RIDGID
FULL LIFETIME WARRANTY
Against Material Defects & Workmanship

Full lifetime warranty (legal warranty extended to the product lifecyle, see warranty conditions)

Printed 3/26
ECN003752

©2025, 2026 Ridge Tool Company.
RIDGID and the Emerson logo are registered trademarks of Emerson Electric Co. or its subsidiaries in the US and other countries.
Any other trademarks belong to their respective holders.

944-733-900.10
REV. C

RIDGID

Find Quality Products Online at: Valuetesters.com info@valuetesters.com