AcuHUM™ RM Series

Room Mount Relative Humidity
& Temperature Sensor Datasheet

The AcuHUM RM series room mount relative humidity (RH) sensor utilizes advanced digital polymer sensing technology to provide highly precise RH measurement, reduce power consumption, and improve long-term stability. The RH sensor features an optional thermistor, RTD, or transmitter to provide temperature and RH signals in one device. The AcuHUM RM is designed to be wall-mounted indoors with a four-way aspiration enclosure design to minimize self-heating. It can be ordered with an optional LCD to display humidity and temperature in one device.

Features

- Polycarbonate housing design for easy wall/surface mount or junction box.
- High-accuracy relative humidity & optional temperature measurement output.
- RH temperature compensation correction offering ±2% accuracy measurement.
- <10s response time, low drift, <±0.5% RH per year, and <±1% RH hysteresis.
- Protection against over-voltage, reverse polarity & electromagnetic interference.
- 4-20mA & 0-10VDC output transmitter options for various BAS controllers.
- 100Ω Platinum, 1KΩ Platinum/Nickel RTDs & 10KΩ Type II/Type III, 20KΩ thermistors available.
- Optional custom configuration for temperature measurement.
- LCD displays RH and optional temperature output sequentially.

ACCUENERGY

Specifications

Relative Humidity Measurement

ELECTRICAL	
Voltage Power	16~28VAC / 16~35VDC
Current Power	18.5~35VDC (RL=500Ω); 8.5~35VDC (RL=0Ω)
Output	4~20mA (2 Wires) or 0~10VDC (3 Wires)
RELATIVE HUMIDITY PERFORMANCE	
RH Sensor Type	Digital Polymer
Accuracy	±2% (25°C, 20~80%RH)
Measurement RH Range	0~100%
Operating RH Range	5~95%RH (Non-Condensing)
Hysteresis	<±1%RH
Response Time	<10s (25°C, in Slow Air)
Drift	<±0.5%RH/Year

Temperature Measurement

ELECTRICAL	
Transmitter Voltage Power	16~28VAC / 16~35VDC
Transmitter Current Power	18.5~35VDC (RL=500Ω); 8.5~35VDC (RL=0Ω)
Transmitter Output	4~20mA (2 Wires) or 0~10VDC (3 Wires)
Output Load	≤500Ω (Current), ≥2KΩ (Voltage)
TEMPERATURE PERFORMANCE	
Temperature Sensor Type	RTD or Thermistor, See Ordering Information
Transmitter Accuracy (If Applicable)	<±0.3°C @ 5~60°C (<±0.54°F @ 41~140°F)
Thermistor Accuracy (If Applicable)	10KΩ, Type III - ±0.3°C @ 25°C (0.54°F @ 77°F) 10KΩ, Type II - ±0.2°C @ 25°C (0.36°F @ 77°F) 20KΩ - ±0.2°C @ 25°C (0.36°F @ 77°F)
RTD Accuracy (If Applicable)	1K Ω Platinum - ±0.2°C @ 25°C (0.36°F @ 77°F) 100 Ω Platinum - ±0.2°C @ 25°C (0.36°F @ 77°F) 1K Ni Ω Nickel - ±0.5°C @ 25°C (0.9°F @ 77°F)
Temperature Transmitter Measurement Range	0~50°C (32~122°F)
Response Time	<10s
ENVIRONMENTAL	
Operating Temperature Range	-20~70°C (-4~158°F)
Storage Temperature	-20~80°C (-4~176°F)
MECHANICAL	
Mounting	Single Gang Junction Box or Surface Mount
Wiring Connection	Screw Terminal Blocks
Weight	110g (0.24lbs)
Display (Optional)	4-Digit LCD with Unit Indication
Display Resolution	0.1°C (0.1°F), 0.1%RH
CERTIFICATIONS/WARRANTY	
Enclosure Material	Fire Retardant Polycarbonate (UL94V-0)
Protection	IP30
Agency Approvals	CE
Warranty	5 Years

Find Quality Products Online at: Valuetesters.com **info@valuetesters.com**

Dimensions

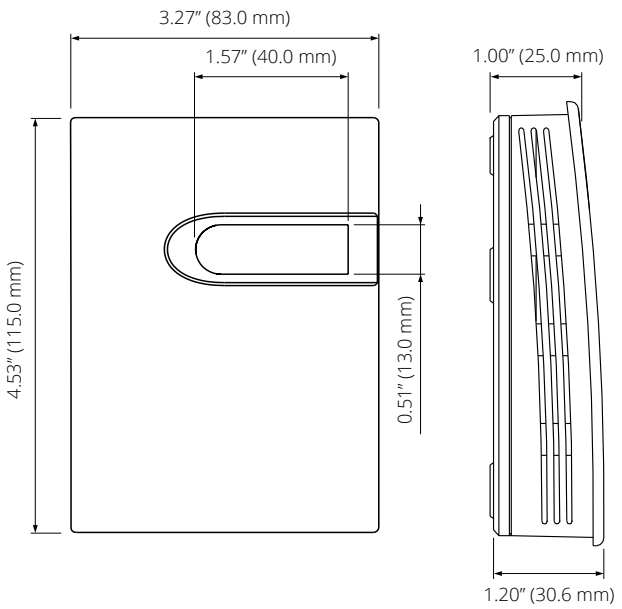

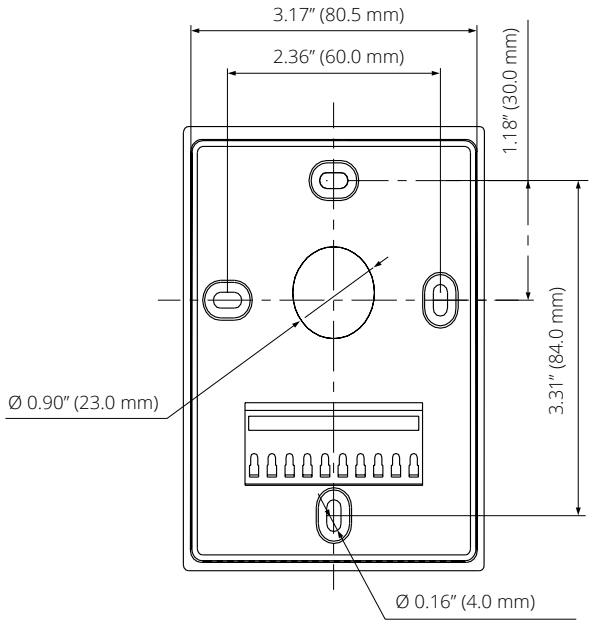

Ordering Information

+ Model	- RH Analog Output	- Temperature Output	- Temperature Sensor	Display
AcuHUM-RM	**A**: 4-20 mA Transmitter	**A**: Resistive Output	**01**: 10KΩ, Type III Thermistor	**A**: With Display, Fahrenheit
	B: 0-10 VDC Transmitter		**02**: 10KΩ, Type II Thermistor	**B**: With Display, Celsius
			03: 20KΩ Thermistor	**C**: No Display
			04: 1KΩ Platinum RTD, 2 Wires	
			05: 100Ω Platinum RTD, 2 Wires	
			06: 1KΩ Nickel RTD, 2 Wires	
	A: 4-20 mA Transmitter	**B**: 4-20mA Output	**07**: Transmitter, 1KΩ Platinum RTD 0-50°C (32-122°F)	**A**: With Display, Fahrenheit[†]
			08: Transmitter, 1KΩ Platinum RTD Special Order [†]	**B**: With Display, Celsius
				C: No Display
	B: 0-10VDC Transmitter	**C**: 0-10VDC Output	**07**: Transmitter, 1KΩ Platinum RTD 0-50°C (32-122°F)	**A**: With Display, Fahrenheit
			08: Transmitter, 1KΩ Platinum RTD Special Order [†]	**B**: With Display, Celsius
				C: No Display
	A: 4-20mA Transmitter	**D**: No Temperature Output	**00**: No Temperature Output	**A**: With Display, RH Only
	B: 0-10VDC Transmitter			**C**: No Display

Ordering Example: AcuHUM-RM-A-A-02-A

[†] **Important:** Special Order Span will increase lead times and may be subject to minimum order requirements.

Note: Selecting the "08 XMTR, 1KΩ RTD Other Span" temperature sensor option allows the transmitter to be calibrated within a -40°C to +100°C (-40°F to 212°F) measurement range. The custom range must be specified at the time of ordering.

Revision Date: December 2025 Version: 1.0.2
Specs Subject To Change Without Notice.

Find Quality Products Online at: Valuetesters.com **info@valuetesters.com**