AcuPRE™ WM Series

Wall Mount Differential Pressure Sensor Installation Guide

CE

ACCUENERGY

Find Quality Products Online at: Valuetesters.com info@valuetesters.com

Copyright © 2025 V: 1.0.1

All Accuenergy brands and trademarks in this document are the property of Accuenergy Inc. All other brands and trademarks may be the property of the respective owners of these rights.

This instruction may not be altered, copied or reproduced in whole or in part by any means without the expressed written consent of Accuenergy.

Please read this manual carefully before installation, operation, and maintenance of the AcuPRE WM Wall Mount Differential Pressure Sensor.

The information contained in this document is believed to be accurate at the time of publication, however, Accuenergy assumes no responsibility for any errors which may appear here and reserves the right to make changes without prior notice as part of continuing improvements. Please ask the local representative for the latest product specifications before ordering. The following symbols in this manual appear throughout this documentation, in addition to the electrical warning of danger or safety risk during the installation and operation of the sensors.

Find Quality Products Online at: Valuetesters.com info@valuetesters.com

The following symbols in this manual appear throughout this documentation, in addition to the electrical warning of danger or safety risk during the installation and operation of the sensors.

	Electrical Shock Hazard: Contains information about procedures which must be followed to prevent the risk of electric shock and danger that can result in personal injury or death.
	Safety Warning: Contains information about circumstances which, if not considered, may result in personal injury or death.
NOTE	**NOTE:** An advance notice to provide additional information before an action is taken by the user.
ALERT	**ALERT:** Indicating the operation may lead to device malfunction or potential data loss.

Installation and maintenance of the AcuPRE WM Differential Pressure Sensor shall only be performed by qualified, competent professionals who have received training and have experience with high voltage and current devices.

Accuenergy shall not be responsible or liable for any damage caused by improper sensor installation and/or operation.

Find Quality Products Online at: Valuetesters.com **info@valuetesters.com**

Table of Contents

Introduction 5

Overview 5

Dimensions 5

Installation 6

Step 1: Preparations 6

Step 2: Pressure Tip Mounting Locations for Common Applications 7

Duct Static Pressure Monitoring 7

Filter Status Monitoring 7

Controlling Room Pressure 8

Step 3: Mounting the DP Sensor 8

Step 4: Connecting PVC Tube to Pressure Ports 9

Step 5: Electrical Wiring 10

Step 6: Selecting Pressure Range 11

Step 7: Selecting Unit of Measurement 12

Step 8: Selecting Response Rate 14

Step 9: Zero Reset and Calibration 14

Technical Specifications 16

Find Quality Products Online at: Valuetesters.com info@valuetesters.com

Introduction

Overview

The AcuPRE WM differential pressure sensor utilizes MEMS sensors and digital technologies to measure positive, negative, and differential pressure (DP). The sensor provides an analog output proportional to the measured difference in pressure and the selected pressure range. It can be used to monitor pressure in any application that has non-combustible and non-corrosive air.

The AcuPRE WM series features various base model numbers with different analog output options, including 0-10 VDC, and 4-20 mA, with either unidirectional (up to 0 to 40 inWC) or bidirectional (up to -2.0 to 2.0 inWC) pressure range, depending on the model number selection. The DP sensor features configurable settings, including zero calibration, pressure range, response time, and unit of measurement. AcuPRE WM comes standard with an LCD display, which helps with troubleshooting and installation.

ALERT: When using 24VAC to power the AcuPRE WM, it is strongly recommended to power the unit with an independent, dedicated, UL-listed class 2 transformer.

ALERT: If any DIP switches or jumper settings are changed, make sure to power off the unit first prior to making changes. Set the DIP switches to the correct position, then reapply power.

Dimensions

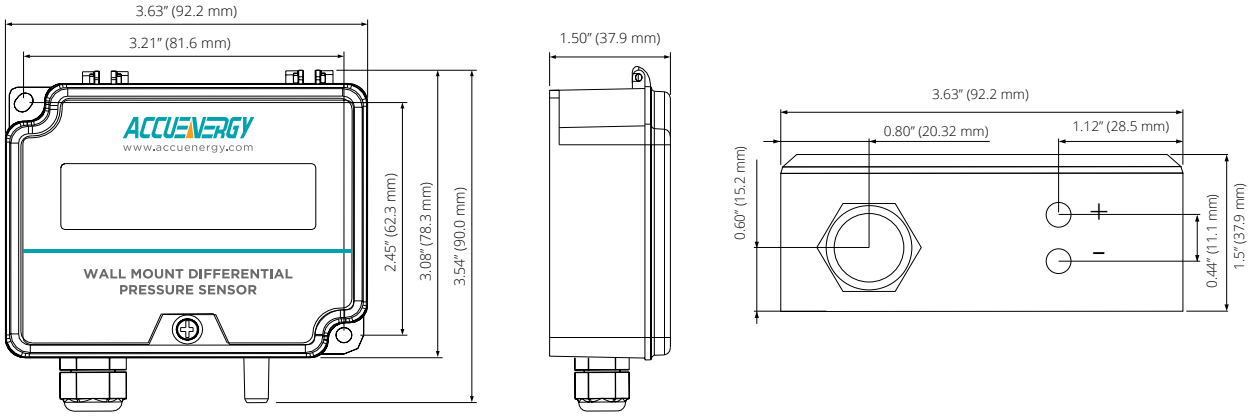

Figure 1 AcuPRE WM Front and Bottom Views

Find Quality Products Online at: Valuetesters.com info@valuetesters.com

Installation

Step 1: Preparations

Make sure to prepare all necessary components and accessories before installing the AcuPRE WM sensor. Different accessories may be required depending on the application.

Table 1 Required Components and Accessories for AcuPRE WM

Items	Description	Type
AcuPRE WM Series	Wall Mount Differential Pressure Sensor	Sensor
PVC Tubing	Clear PVC tubing. Available in two different sizes.	Accessories*
Pressure Tip	Six different pressure tip models, available in ABS plastic or 304 stainless steel in various lengths and shapes.	Accessories*
Pickup Ports	Two models available.	Accessories*

* Accessories are sold separately.

The following diagram shows the internal schematics of the AcuPRE WM differential pressure sensor. The output ports, measurement unit selection DIP switches, response rate selection DIP switches, and pressure range selection jumpers are highlighted.

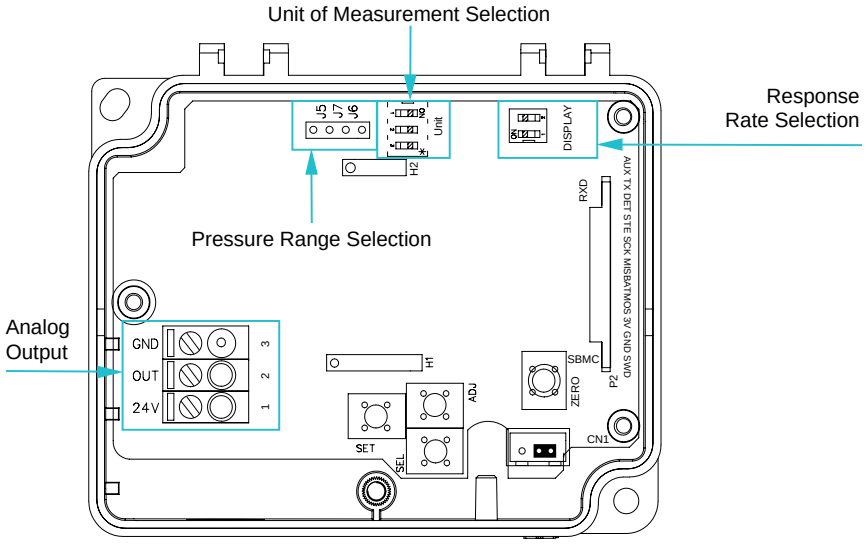

Figure 2 Internal Schematics of AcuPRE WM

Find Quality Products Online at: Valuetesters.com info@valuetesters.com

Step 2: Pressure Tip Mounting Locations for Common Applications

Duct Static Pressure Monitoring

The AcuPRE WM requires one static pressure tip for duct static pressure monitoring.

Accuenergy offers static pressure tip models AcuPRE-XX-003, AcuPRE-XX-005, AcuPRE-XX-006, AcuPRE-XX-007, and AcuPRE-XX-008. Available in ABS plastic or 304 stainless steel in various lengths and shapes. Refer to the AcuPRE WM datasheet for full description.

When placing the AcuPRE WM DP sensor, the pressure ports and the static pressure tip should not be in close proximity to the bends, fans, or dampers to avoid turbulent air. The tapping point must not be located where it will be affected by obstructions to the flow.

The HIGH-pressure port of the AcuPRE WM will be connected to the duct static pressure tip via the PVC tubing, and the LOW-pressure port will monitor ambient pressure.

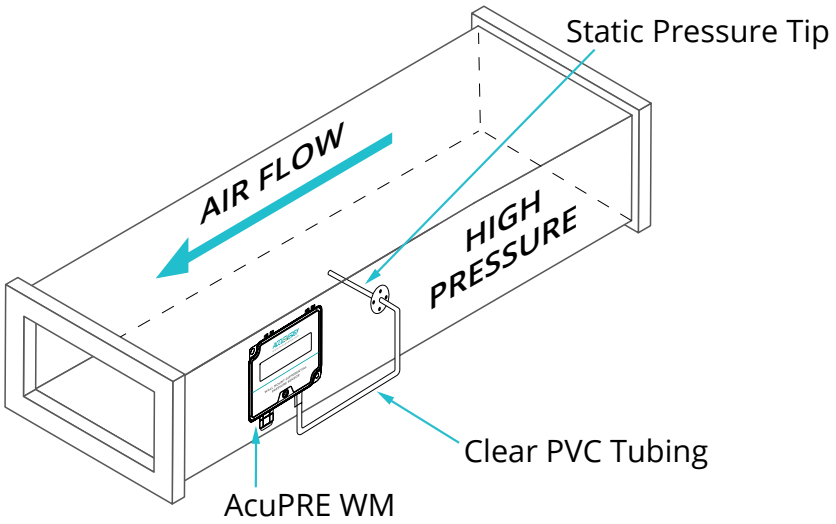

Figure 3 AcuPRE WM Duct Static Pressure Connection

Filter Status Monitoring

The AcuPRE WM requires two static pressure tips for filter status monitoring.

Accuenergy offers static pressure tip models AcuPRE-XX-003, AcuPRE-XX-005, AcuPRE-XX-006, AcuPRE-XX-007, and AcuPRE-XX-008. Available in ABS plastic or 304 stainless steel in various lengths and shapes. Refer to the AcuPRE WM datasheet for full description.

When the filter is clean and not obstructed by any debris, the pressure difference (differential pressure) is low. As the filter clogs with dust and debris, the pressure drop across the filter increases and the differential pressure increases.

The HIGH-pressure port must be mounted in front of the filter and the LOW-pressure port needs to be installed after the filter. Refer to the following figure.

Find Quality Products Online at: Valuetesters.com info@valuetesters.com

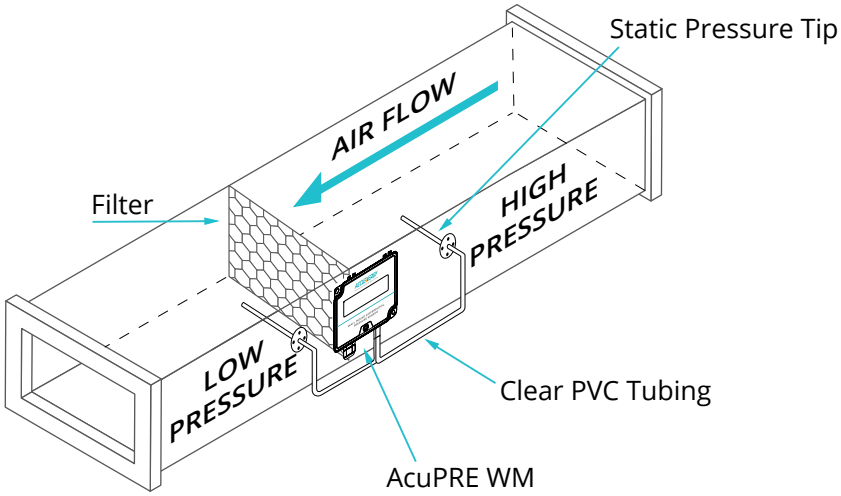

Figure 4 AcuPRE WM Filter Status Detection

Controlling Room Pressure

Utilize the AcuPRE-XX-009 room or AcuPRE-XX-010 pressure pickup port for space or room pressure reference. Refer to the AcuPRE WM datasheet for additional details.

When attempting to maintain positive pressure in the room, connect the HIGH-pressure port to the pickup port reference in the space requiring positive pressure. The LOW-pressure port should be connected outside of the space in the common hallway.

In a negative room pressure application, the LOW-pressure port should be connected to the pickup port mounted in the room, and the HIGH-pressure port should reference the pressure outside the room.

Step 3: Mounting the DP Sensor

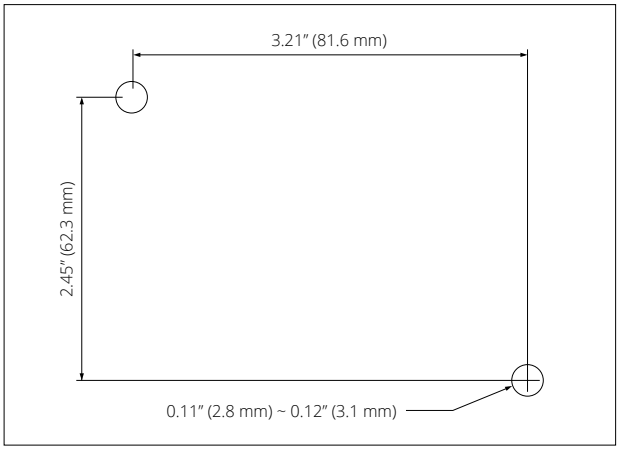

Figure 5 AcuPRE WM Mounting Template

Find Quality Products Online at: Valuetesters.com info@valuetesters.com

Mount the DP sensor on a flat vertical surface. It is recommended that the AcuPRE WM be mounted with the connection ports pointed towards the ground to prevent moisture from entering either the pressure ports or the electrical cable entry. Attach the mounting flange to a flat surface using supplied mounting screws.

NOTE: Over-tightening screws may cause damage to mounting flanges.

NOTE: Avoid mounting the AcuPRE WM in close proximity to vibrating equipment or surfaces. Excessive vibration may cause accuracy issues with pressure readings.

Step 4: Connecting PVC Tube to Pressure Ports

The AcuPRE WM accepts 3/16" (5mm) inner diameter (ID) tubing on both the High/Low pressure ports. Simply cut the PVC tubing into the desired length and push onto the port connections.

The HIGH-pressure and LOW-pressure ports of the AcuPRE WM require a 3/16" (5mm) ID PVC tubing for the process connection. Accuenergy recommends sourcing accessory AcuPRE-XX-001 or AcuPRE-XX-002 PVC tubing.

For best results, 3/16" (5mm) ID tubing lengths should be limited to a maximum length of 50' (15.24m). Larger ID tubing may be required for runs longer than 50'.

Inspect tubing after installation to ensure no kinks or punctures are present, which will affect pressure accuracy.

Figure 6 AcuPRE WM HIGH and LOW Pressure Ports

Find Quality Products Online at: Valuetesters.com info@valuetesters.com

Step 5: Electrical Wiring

The DP sensor must be powered OFF during installation and wiring. Failure to do so may result in damage to the DP sensor.

When using a shielded cable, ground the shield only at the controller end. Grounding both ends can cause a ground loop.

Open the hinged cover of AcuPRE WM by removing the single screw located at the bottom of the enclosure.

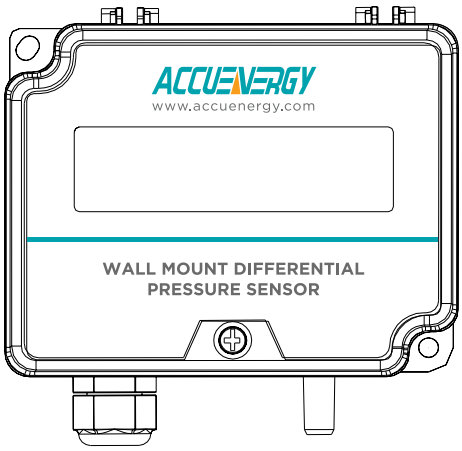

Figure 7 AcuPRE WM Hinged Cover

ALERT: When using 24VAC to power the AcuPRE WM, it is strongly recommended to power the unit with an independent dedicated UL-Listed class 2 transformer.

ALERT: If sharing a 24VAC transformer with other equipment such as controllers, transmitters or actuators, improper polarity will cause damage to the sensor.

ALERT: Do not mix half and full-wave rectified devices when powering with AC voltage. The AcuPRE WM is half-wave rectified.

Locate the wiring terminals and connect the AcuPRE WM DP sensor as shown in the following figure. AcuPRE WM series is available in 0-10V, and 4-20mA output ratings, depending on the model selection.

Find Quality Products Online at: Valuetesters.com info@valuetesters.com

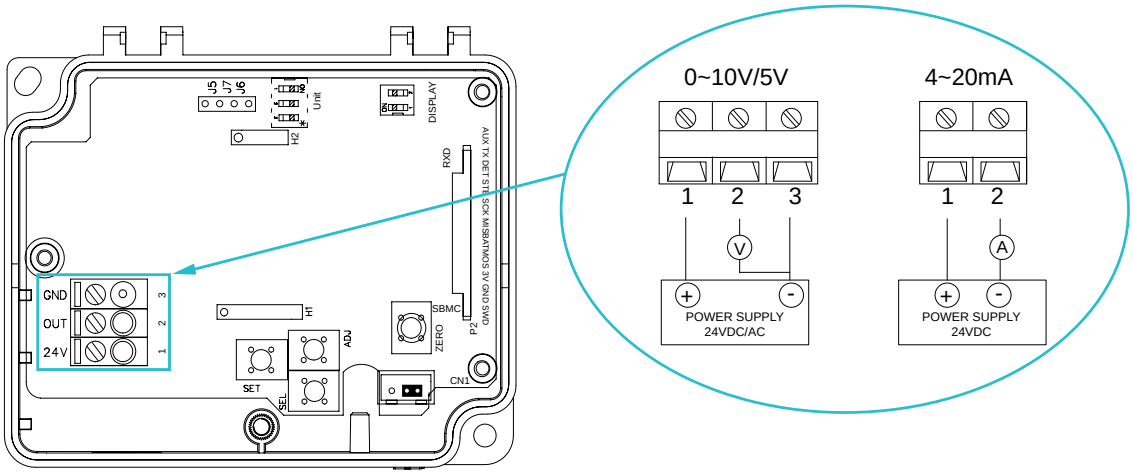

Figure 8 AcuPRE WM Wiring Terminals

The wiring terminals for AcuPRE WM and their detailed descriptions are listed in the table below.

Table 2 AcuPRE WM Wiring Terminals

AcuPRE WM Wiring Termination			
Analog Output Signal	**24V Power Terminal**	**GND Terminal**	**OUT Terminal**
4 to 20 mA (2-Wire)	18.5~35VDC	Not Applicable for This Model	Milliamp Signal To Controller Analog Input
0 to 5 VDC (3-Wire)	16~28VAC/ 16~35VDC	To Controller Ground	VDC Signal To Controller Analog Input
0 to 10 VDC (3-Wire)	16~28VAC/ 16~35VDC	To Controller Ground	VDC Signal To Controller Analog Input

NOTE: Accuenergy recommends 16 to 24 AWG twisted pair wires or shielded cables for all DP sensors. This applies to both supply power and analog output wiring.

NOTE: Not observing these recommendations may damage the product and void the warranty.

NOTE: Watertight PG9 cordgrip installed (5/8" knockout hole when PG9 removed).

Step 6: Selecting Pressure Range

ALERT: Do not switch the pressure range and output mode when the power is on. Make sure to power off the AcuPRE WM first, then set the jumpers to the correct positions and then power on the DP sensor.

Find Quality Products Online at: Valuetesters.com info@valuetesters.com

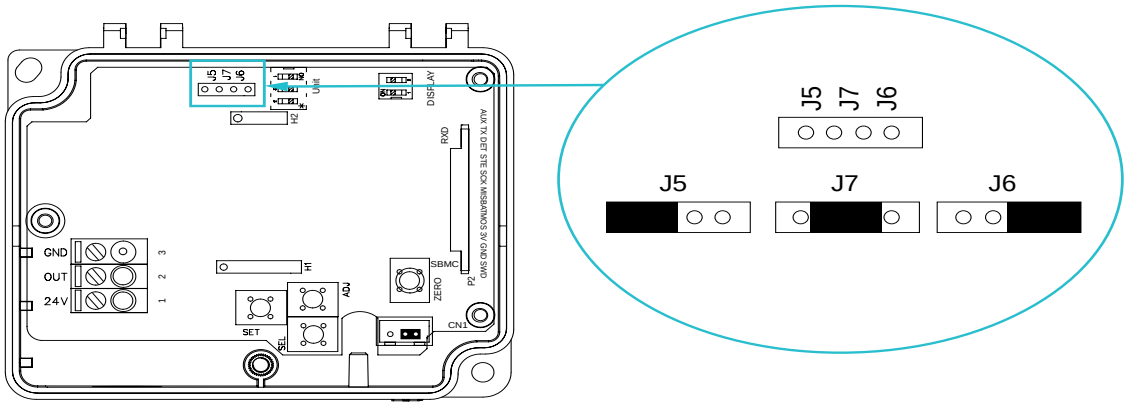

Figure 9 AcuPRE WM Pressure Range Selection Jumpers

Table 3 Pressure Range Jumper Placement Setting

Models	Jumper Placement			
	Range (inWC Default)	J5	J6	J7 (Default)
AcuPRE-WM-01 (Unidirectional)	0 to 0.1″			●
	0 to 0.25″	●		
	0 to 0.50″		●	
AcuPRE-WM-02 (Unidirectional)	0 to 1.0″			●
	0 to 2.0″	●		
	0 to 4.0″		●	
AcuPRE-WM-03 (Unidirectional)	0 to 10.0″			●
	0 to 20.0″	●		
	0 to 40.0″		●	
AcuPRE-WM-04 (Bidirectional)	-0.125″ to +0.125″	●		
	-0.25″ to +0.25″		●	
AcuPRE-WM-05 (Bidirectional)	-0.50″ to +0.50″			●
	-1.0″ to +1.0″	●		
	-2.0″ to +2.0″		●	

Step 7: Selecting Unit of Measurement

The AcuPRE WM offers field-selectable units of measurement for quick pressure conversion. The default measurement is inWC (inches of water column) but can be changed to pascals, kPa, mbar, and mmWC via onboard DIP switches. Refer to the following figure for switch settings.

Find Quality Products Online at: Valuetesters.com info@valuetesters.com

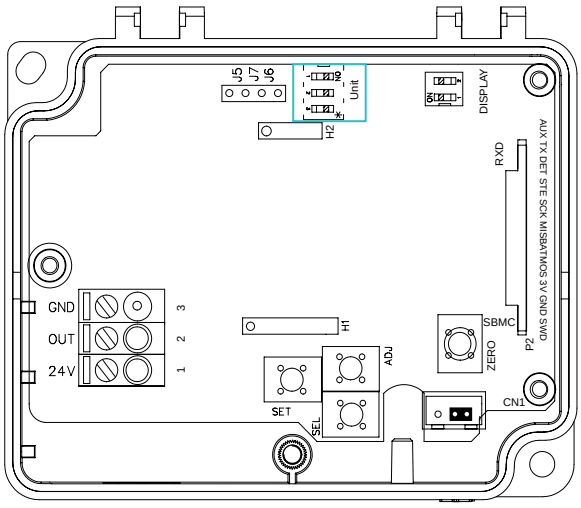

Figure 10 AcuPRE WM Unit Selection DIP Switches

Table 4 DIP Switch Selection & Unit of Measurement Conversion Table

Models	Unit, Range, and Display Resolution				
	inWC (Default)	Pascals	kPa	mmWC	mbar
	ON 1 ON 2 ON 3	ON 1 ON 2 ON 3	ON 1 ON 2 ON 3	ON 1 ON 2 ON 3	ON 1 ON 2 ON 3
AcuPRE-WM-01 (Unidirectional)	0.1	25	0.025	2.5	0.25
	0.25	60	0.06	6	0.6
	0.5	125	0.125	12	1.25
AcuPRE-WM-02 (Unidirectional)	1	250	0.25	25	2.5
	2	500	0.5	50	5
	4	1000	1	100	10
AcuPRE-WM-03 (Unidirectional)	10	2500	2.5	250	25
	20	5000	5	500	50
	40	10000	10	1000	100
AcuPRE-WM-04 (Bidirectional)	-0.125" to +0.125"	-30 to +30	-0.03 to +0.03	-3.05 to +3.05	-0.3 to +0.3
	-0.25" to +0.25"	-62.5 to +62.5	-0.062 to +0.062	-6.30 to +6.30	-0.625 to +0.625
AcuPRE-WM-05 (Bidirectional)	-0.50" to +0.50"	-125 to +125	-0.125 to +0.125	-12.5 to +12.5	-1.25 to +1.25
	-1.0" to +1.0"	-250 to +250	-0.250 to +0.250	-25.5 to +25.5	-2.50 to +2.50
	-2.0" to +2.0"	-500 to +500	-0.500 to +0.500	-50.5 to +50.5	-5.00 to +5.00

Find Quality Products Online at: Valuetesters.com info@valuetesters.com

Step 8: Selecting Response Rate

The sensor has field-selectable response times of 0.5 (Default), 1, 2, and 5 seconds. Refer to the following figures for DIP switch location and settings.

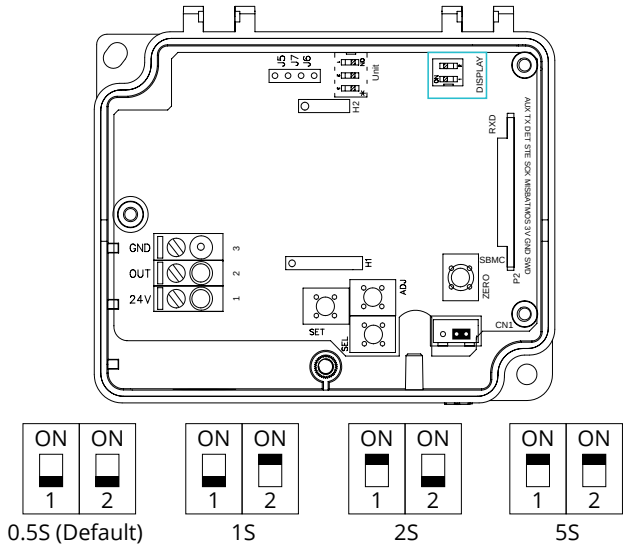

Figure 11 Response Rate Selection DIP Switches

Step 9: Zero Reset and Calibration

Performing a zero reset calibration after the AcuPRE WM is installed is recommended.

Different environments, shipping, and DP sensor characteristics may cause sensor drift. Perform the initial zero reset with power applied. Wait 15 to 20 minutes to allow the circuitry to warm up and stabilize before performing the zero reset calibration.

During the zero reset calibration, keep the HIGH (+) and LOW (-) pressure ports unconnected from the PVC tube in stable air. The zero reset process must be performed with NO pressure applied to the sensor.

Press the **ZERO** button for 5 seconds to perform the zero reset, release the button, and watch the LCD for pressure to stabilize.

The DP sensor should be periodically reset to zero every 6 to 12 months to offset any drifting that may have occurred.

Find Quality Products Online at: Valuetesters.com info@valuetesters.com

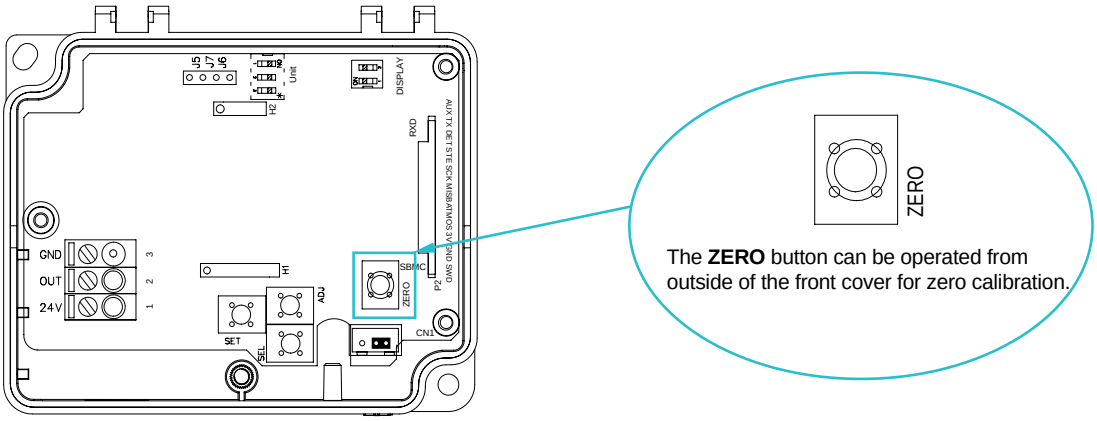

Figure 12 AcuPRE WM Zero Calibration Button

NOTE: The **SET**, **SEL**, and **ADJ** buttons are reserved for Modbus communication configurations. They currently hold no function for operators.

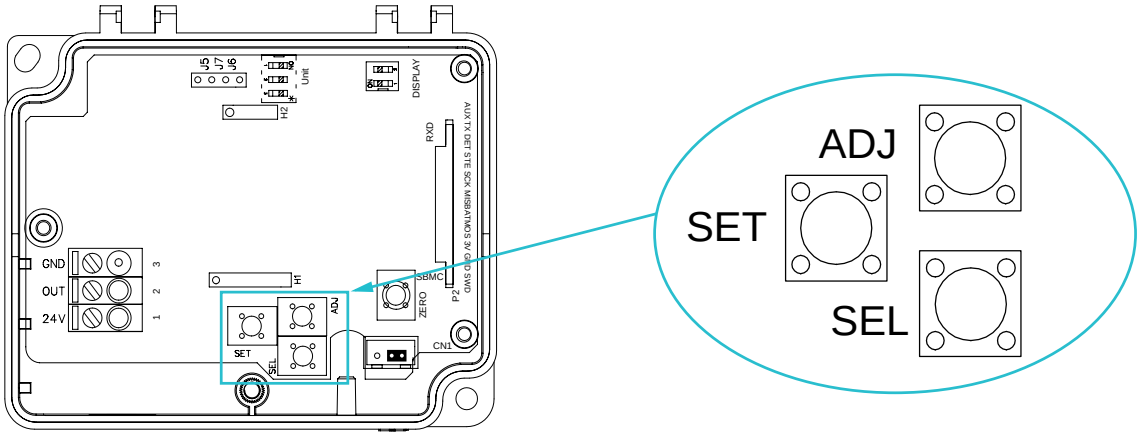

Figure 13 AcuPRE WM SET, SEL, and ADJ Buttons

Find Quality Products Online at: Valuetesters.com info@valuetesters.com

Technical Specifications

Electrical

Voltage Power	16~28VAC / 16~35VDC
Current Power	18.5~35VDC (RL=500Ω), 8.5~35VDC (RL=0Ω)
Output (Based on Select Models)	0~5VDC, 0~10VDC, 4~20mA (2 Wires)
Output Load	≤500Ω (Current), ≥2kΩ (Voltage)

Environmental

Medium	Non-Combustible, Non-Corrosive Air
Medium Temperature Range	0 to 60°C (32 to 140°F)
Operating Temperature Range	-20 to 70°C (-4 to 158°F)
Temperature Compensation	0 to 50°C (32 to 122°F)
Working Pressure	Overload 10xFS, Burst 15xFS

Mechanical

Mounting	2-Screw Surface Mount with Hinged Cover
Connection	5mm ID Tubing (0.19") High/Low Pressure Ports
Weight	165g (0.36 lbs)
Display	4-Digit LCD, Size 65x18mm (2.56"x0.70") with Unit Indication

Performance

Accuracy	±1.0%FS (±2.0%FS@0.10inWC Range)
Stability	±0.5%FS/Year
Thermal Effect	<0.08% FS/°C (FS) (+/- 0.045% FS/°F)
Response Time	0.5/1/2/5s, Can be Set by DIP Switches

Certification/Warranty

Enclosure Material	ABS+PC (Housing) & PC (Cover), Fire Retardant UL94V-0
Protection	IP65
Agency Approvals	CE
Warranty	5 Years

Find Quality Products Online at: Valuetesters.com info@valuetesters.com

MAKE ENERGY USAGE SMARTER

For additional help please reach out to:

Accuenergy Sales

Accuenergy Technical Support

ISO 9001, 14001
& 45001 Certified

Revision Date: November 2025 Version: 1.0.1
Specs Subject To Change Without Notice.

Find Quality Products Online at: Valuetesters.com **info@valuetesters.com**