Blancett®
Turbine Flow Meters

Flow Transmitter

Model RT-30SD

Badger Meter®

User Manual

Find Quality Products Online at: Valuetesters.com info@valuetesters.com

CONTENTS

Scope of This Manual 5
Typographic Conventions 5
Unpacking and Inspection 5
Safety 5
Terminology and Symbols 5
Product Description 6
Screen Selection and Programming Changes 6
Specifications 6
Connections 6
Hookup Board 7
Main Display Board 7
Analog Output 8
Limit & Frequency Output 8
Reset Input 8
Run Mode Screens 9
LOGO Screen 10
RATE Screen 10
TOTAL Screen 10
RATE/TOTAL Screen 10
GRAND TOTAL Screen 10
STATUS Screen 11
ANALOG OUT Screen 11
LIMIT Screen 11
Control Functions 12
Programming 14
Entering Programming Mode 14
Changing Values and Making Selections 14
Rate/Total Scaling 15

Find Quality Products Online at: Valuetesters.com info@valuetesters.com

K-factor (Scaling Factor) 15
RATE Units 15
RATE Time Base 15
TOTAL Unit 16
Analog Programming 16
Min Flow Rate 17
Min Flow mA 17
Max Flow Rate 17
Max Flow mA. 17
Zero Flow mA 17
Zero Total mA 18
Max Total Value 18
Max Total mA. 18
Zero Grand Total mA 18
Max Grand Total Value 18
LIMITS Programming 18
Turn Limits OFF 19
Frequency Output on Limit Pins. 19
Cycle Output (Pulsed Output) 19
Rate Value. 20
Limit Margin 20
TOTAL Limit and GRAND TOTAL Limit 21
Total Value and Grand Total Value. 21
Frequency Output Programming 21
Gate Time Filter Programming 21
Linearizer Programming 22
Freq. Variable. 22
K-F Variable 22
Clearing the Linearizer Table 22
Changing the Linearizer Table 23
Adding Linearizer Table Point 23

Find Quality Products Online at: Valuetesters.com **info@valuetesters.com**

Calibrating Analog Output 23
I/O Manual Adjustment 24
Analog Output Adjustment 24
Fine mA Adjustments 25
Coarse mA Adjustments 25
Limit and Frequency Adjustment 25
Monitor External Reset Input 26
Dimensions 27
Single Access Enclosure (shown with HUB-40 sensor) 27
Dual Access Enclosure (shown with HUB-40 sensor) 27

Find Quality Products Online at: Valuetesters.com **info@valuetesters.com**

SCOPE OF THIS MANUAL

This manual is intended to help you get the RT-30SD Flow Transmitter up and running quickly. Read this manual carefully before attempting any installation or operation. Keep the manual accessible for future reference.

Typographic Conventions

- In step-by-step instructions, **bold** text indicates items on the screen you need to select or act upon.
  Example: Click the **Setup** menu.
- Names of parameters, options, boxes, columns and fields are italicized.
  Example: The value displays in the Status field.
- Messages and special markings are shown in quotation marks.
  Example: "Error" displays in the title bar.
- In most cases, software screen text appears in the manual as it does on the screen. For example, if a word is capitalized on the screen, it is capitalized when referred to in the manual.

UNPACKING AND INSPECTION

Upon opening the shipping container, visually inspect the product and applicable accessories for any physical damage such as scratches, loose or broken parts, or any other sign of damage that may have occurred during shipment.

NOTE: If damage is found, request an inspection by the carrier's agent within 48 hours of delivery and file a claim with the carrier. A claim for equipment damage in transit is the sole responsibility of the purchaser.

SAFETY

Terminology and Symbols

⚠ DANGER	Indicates a hazardous situation, which, if not avoided, is estimated to be capable of causing death or serious personal injury.
⚠ WARNING	Indicates a hazardous situation, which, if not avoided, could result in severe personal injury or death.
⚠ CAUTION	Indicates a hazardous situation, which, if not avoided, is estimated to be capable of causing minor or moderate personal injury or damage to property.

Find Quality Products Online at: Valuetesters.com **info@valuetesters.com**

PRODUCT DESCRIPTION

The RT-30 is a digital flow transmitter housed in an epoxy painted aluminum instrument enclosure. The unit's graphical, backlighted LCD display makes it easy to monitor flow rate and total in user selectable engineering units. The sensor used with the unit will mount on many meter models modified for use with the 3/8 in. NPT sensor mounting thread. Meter models available include the JVM, JVS, JVHS and ZHM gear meters.

Screen Selection and Programming Changes

You can make program or mode changes, or reset the totalizer in two ways;

- With the housing cover removed, enter information using the 4 push-buttons.
- With the housing cover closed, hold the attached magnet wand against the side of the cover to activate hall switches located on the internal circuit board.

You can also reset the totalizer and monitor flow rate limits and total output remotely via a computer or PLC.

SPECIFICATIONS

Power Requirement	9…24V DC 200 mA (customer supplied) Class 2
Analog Output	4…20 mA
	PWM converter
	3- or 2-wire plus separate supply
	Max. load impedance 500 Ohm
Three Opto-Isolated Open-Collector Outputs	Programmable for frequency or limit outputs
	5…30V DC rating
	40 mA max. (Min. load impedance required: 600 Ohm @ 30V DC)
Linearizer	Built in, 30 point
Frequency Range	0…4500 Hz
Temperature Rating	– 4…140° F (–20…60° C)
Connection	3/4 in. female NPT conduit provisions
One Opto-Isolated Input	9…24V DC remote reset

CONNECTIONS

On dual access enclosure versions, the hookup board can be accessed by removing the blind cover.

To get access to the hook-up board on the single access enclosure models, first remove the cover and loosen the 4 stainless steel screws visible through the face plate. See *Figure 18 on page 13*. Note that the screws are captured on the back side of the main display board and will not fall out. Carefully remove the main display board. The hook-up board is located at the bottom of the enclosure. See *Figure 2 on page 7*.

Find Quality Products Online at: Valuetesters.com **info@valuetesters.com**

Hookup Board

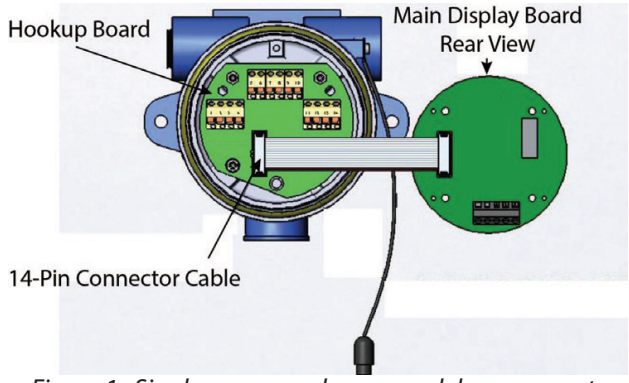

Figure 1: Single access enclosure model components

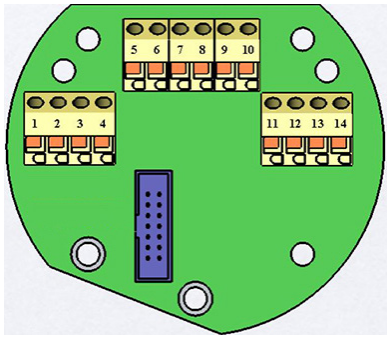

Figure 2: Hookup board connection

NOTE: Hookup board max. wire gauge is 16 AWG.

Pin No.	Description
1	(+) Reset
2	(-) Reset
3	(+) Frequency Out
4	(-) Frequency Out
5	(+) Supply Voltage
6	(-) Supply Voltage / Ground (Supply may be floating or jumpered to housing ground, if needed, for noise reduction.)
7	Housing Ground
8	+Vcc
9	mA Loop Connection (See *Figure 4* and *Figure 5 on page 8* for mA signal polarity)
10	mA Loop Connection
11	(+) Limit 1
12	(-) Limit 1
13	(+) Limit 2
14	(-) Limit 2

Main Display Board

NOTE: Main board max. wire gauge is 12 AWG.

Pin No.	Description
A	Magnetic Coil input
B	Magnetic Coil input
C	Ground
D	High Level Pulse Input
E	(+) 12V DC Output for sensor supply

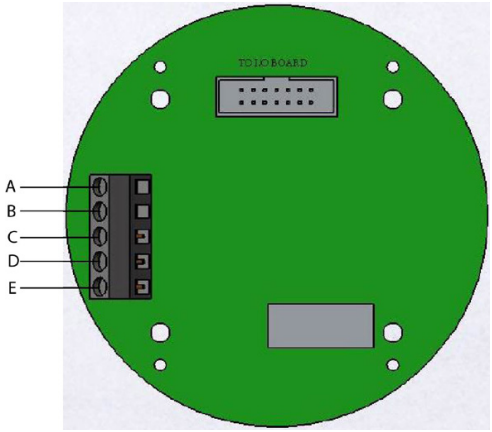

Figure 3: Main board connection

Analog Output

The isolated 16-bit 4…20 mA output can be wired for use with loop-powered inputs or for ground-referenced inputs. The analog signal has an LED in series that varies in intensity as the mA signal varies which is valuable for troubleshooting purposes.

When using the analog signal with inputs used with loop-powered signals, the RT-30EX still requires a separate power supply. See *Figure 4*.

When using the analog signal with ground-referenced inputs, jumper together pins 8 and 9. See *Figure 5*. Analog signal is taken from pin 10 and returns to pin 6 (supply ground).

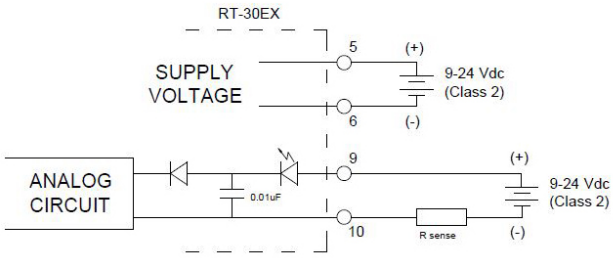

Figure 4: Loop powered analog output

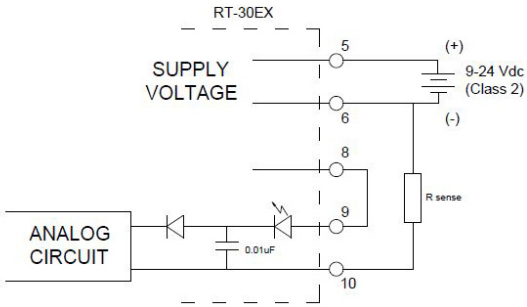

Figure 5: Ground referenced analog output

Limit & Frequency Output

Three opto-isolated NPN open-collector outputs can sink or source, depending on connection. Pay attention to polarity of connections. See *"Specifications" on page 6* and *"LIMIT Screen" on page 11*.

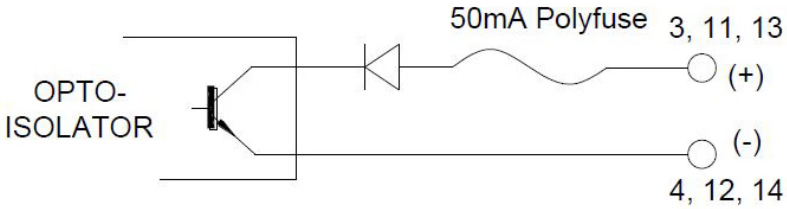

Figure 6: Limit 1, Limit 2 & Frequency outputs

Reset Input

Opto-isolated external reset input will trigger the RT-30EX to reset the totalizer when the input sees a momentary transition from low (ground) to high (near supply).

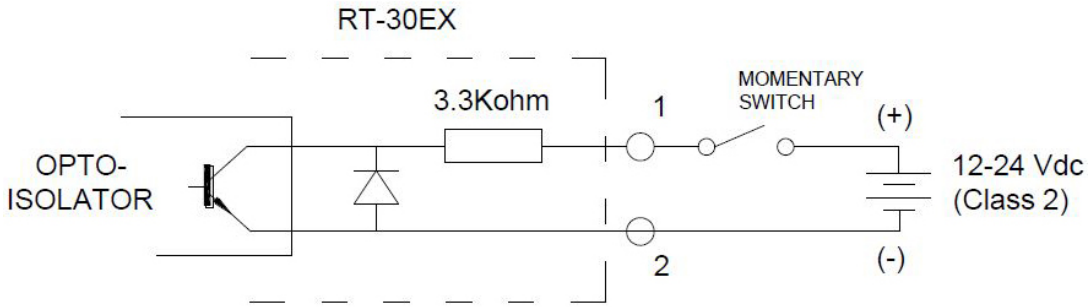

Figure 7: External reset input

RUN MODE SCREENS

The *Run Mode* screens, as shown below, can be accessed by using the *UP* and *DN* buttons or using the attached magnet wand to activate internal hall switches.

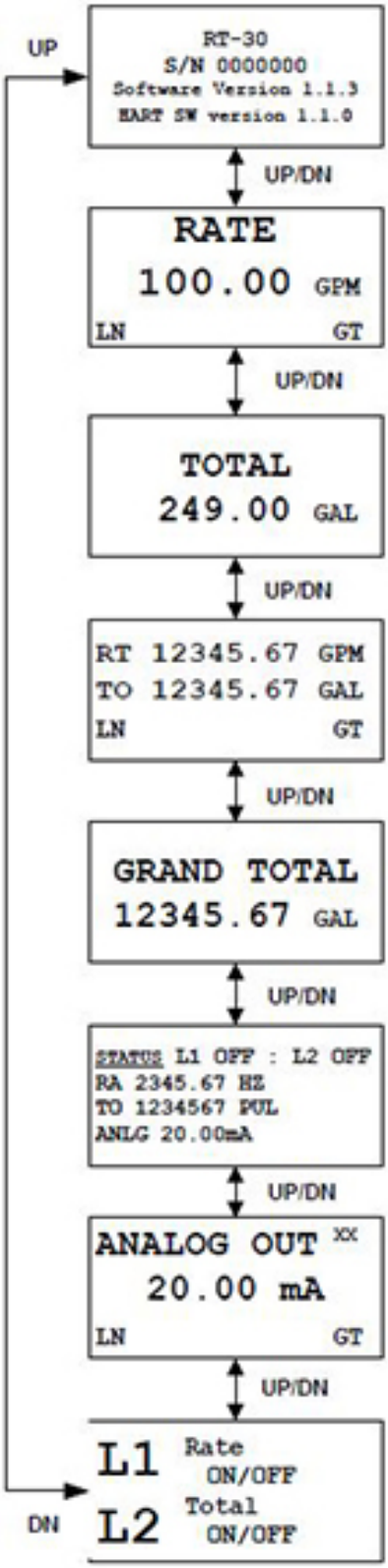

LOGO screen shows critical information on RT-30EX firmware version.

RATE screen shows active flow rate information in programmed engineering units.

TOTAL screen shows totalized volume in programmed engineering units.

RT/TO screen shows both the flow rate and total values in programmed engineering units.

GRAND TOTAL screen shows totalized volume in programmed engineering units and is not affected if *TOTAL* is reset.

STATUS screen shows data summary. Flow and total are in unscaled units of Hertz for flow and Pulses for total.

ANALOG OUT screen shows the mA value the RT-30EX is outputting.

L1/L2 screen shows information for Limit outputs.

Figure 8: Run mode screens overview

LOGO Screen

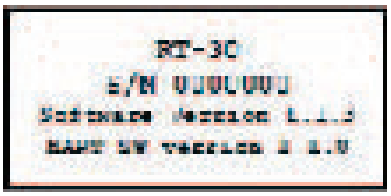

Figure 9: LOGO screen

The *LOGO* screen shows 3 or 4 lines of important data for the display unit which is needed if contacting the factory for support issues.

- Line 1 shows the basic model name.
- Line 2 shows the unique serial number of the unit.
- Line 3 shows the firmware version of the unit.

RATE Screen

Figure 10: RATE screen

The *RATE* screen displays the *Flow Rate* in the programmed engineering units. If the *Linearizer* is active, "LN" shows in lower left corner. If the *Gate Time* filter is active, "GT" shows in lower right corner.

TOTAL Screen

Figure 11: TOTAL screen

The *TOTAL* screen displays the *Flow Total* in programmed engineering units. Pressing the *RESET* button resets the value back to zero (0). The *TOTAL* can also be reset remotely by connecting a momentary voltage to the external *RESET* pin.

RATE/TOTAL Screen

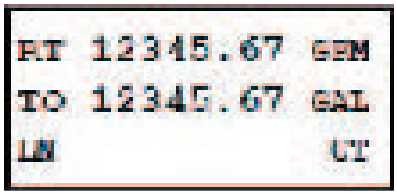

Figure 12: RATE/TOTAL screen

The *RATE/TOTAL* screen shows both the *Flow Rate* and *Flow Total* values in programmed engineering units. If the *Linearizer* is active, "LN" shows in lower left corner. If the *Gate Time* filter is active, "GT" shows in lower right corner. Pressing the *RESET* button resets the total value back to zero (0). The *TOTAL* can also be reset remotely by connecting a momentary voltage to the external *RESET* pin.

GRAND TOTAL Screen

Figure 13: GRAND TOTAL screen

The *GRAND TOTAL* screen displays the flow total in programmed engineering units. The *GRAND TOTAL* value does not reset when the *TOTAL* value is reset and is therefore often used to collect a day total in batch applications. To reset the *GRAND TOTAL* a password is required. The password is 53126. This password cannot be changed.

STATUS Screen

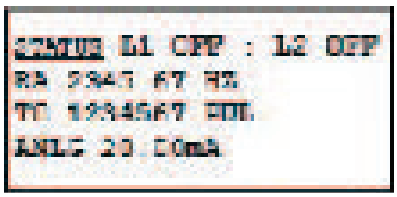

Figure 14: STATUS screen

The *STATUS* screen shows multiple values and is used as a summary screen for troubleshooting a system.

The following values are shown:

- The output state of Limit 1 and Limit 2
- The *Flow Rate* in unscaled units of Hertz (frequency)

NOTE: The *Gate Time* filter and *Linearizer*, if active, do not affect the flow rate value in the *STATUS* screen. This is the raw incoming frequency.

- The *Total Value* in unscaled units of pulses.
- The *Analog Output* in milliamp (mA). Because the mA value is an actual signal output, it is affected by the Gate Time and Linearizer, if activated.

ANALOG OUT Screen

Figure 15: ANALOG OUT screen

The *ANALOG OUT* screen shows the mA value the RT-30EX transmitter is outputting. The 2 letters in the upper right corner indicate what variable the mA output has been assigned to represent. If the *Linearizer* is active, "LN" shows in lower left corner. If the *Gate Time* filter is active, "GT" shows in right corner.

- FX: Fixed mA output
- RA: mA output is scaled to represent the *RATE* value
- TO: mA output is scaled to represent the *TOTAL* value
- GT: mA output is scaled to represent the *GRAND TOTAL* value

LIMIT Screen

Figure 16: LIMIT screen

The *LIMIT L1/L2* screen shows what the *Limits* are programmed to represent and the state of the output.

The first line of each limit represents what the *Limit* is programmed for:

- OFF: The *LIMIT* output has been turned off
- Frequency: The *LIMIT* outputs the incoming frequency
- Rate: The *LIMIT* output will change state when the *Flow Rate* reaches the programmed value
- Total: The *LIMIT* output will change when the *TOTAL* reaches the programmed value
- Grand Total: The *LIMIT* output will change when the *GRAND TOTAL* reaches the programmed value

The second line of each *LIMIT* represents the actual state of the output pin(s).

CONTROL FUNCTIONS

There are two methods for scrolling through screens and making changes within *Programming Modes*. If in a safe area with the front cover removed, use the 4 push-buttons showing through the front face plate with the button function as shown on the face plate.

⚠ WARNING

IF PROGRAMMING OR SCREEN CHANGES ARE TO BE MADE WHILE THE RT30EX IS IN THE HAZARDOUS AREA, DO NOT REMOVE COVER TO USE THE PUSH-BUTTONS. KEEP COVER ON AND USE THE MAGNETIC WAND. ONLY USE PUSH-BUTTONS IN A NONHAZARDOUS AREA.

Alternately, with the cover closed, use the magnetic wand attached to the outside of the unit to make changes. The push-button functions are duplicated with internal Hall switches that activate when the magnetic wand is held in the 3, 6, 9 or 12 o'clock positions. See *Figure 18* and *Figure 19 on page 13*.

The faceplate is marked at each position with the corresponding function. See *Figure 17*.

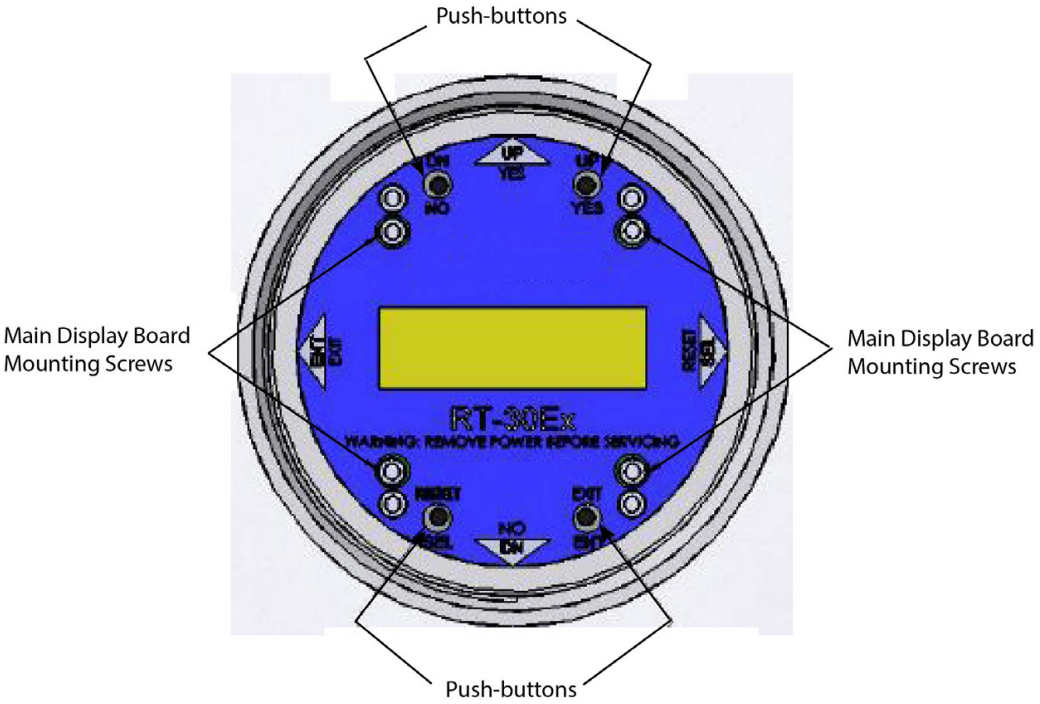

Figure 17: Front view

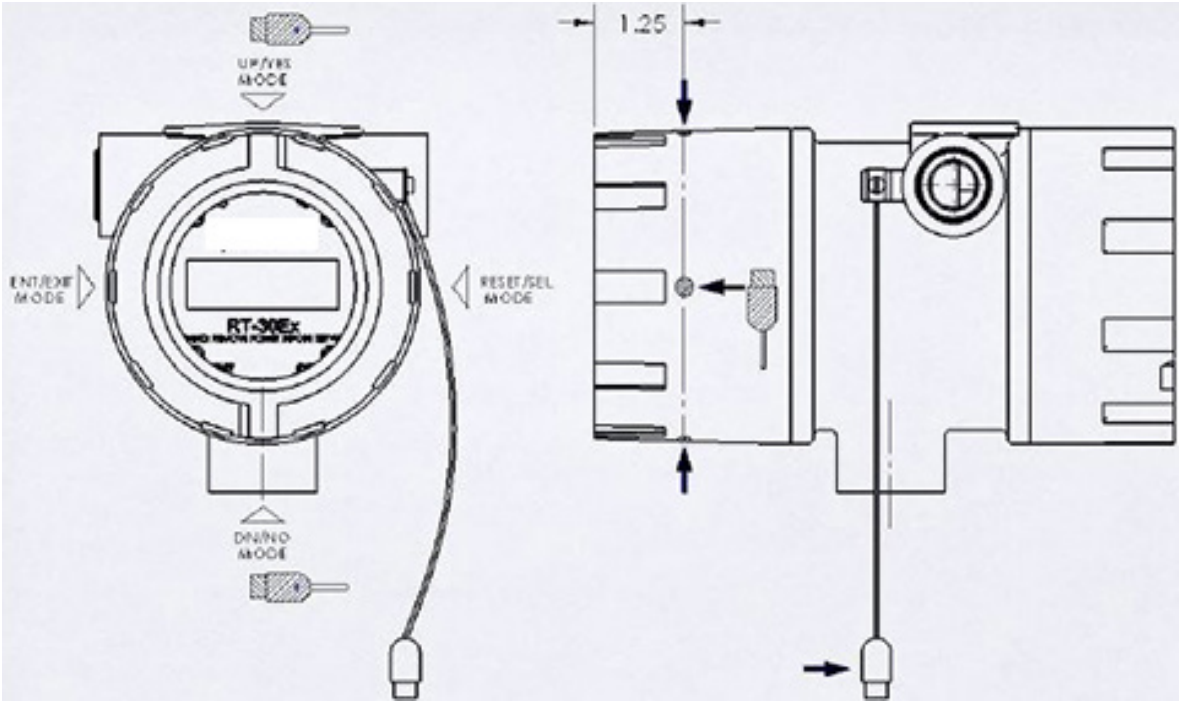

Figure 18: Dual access magnetic switch locations

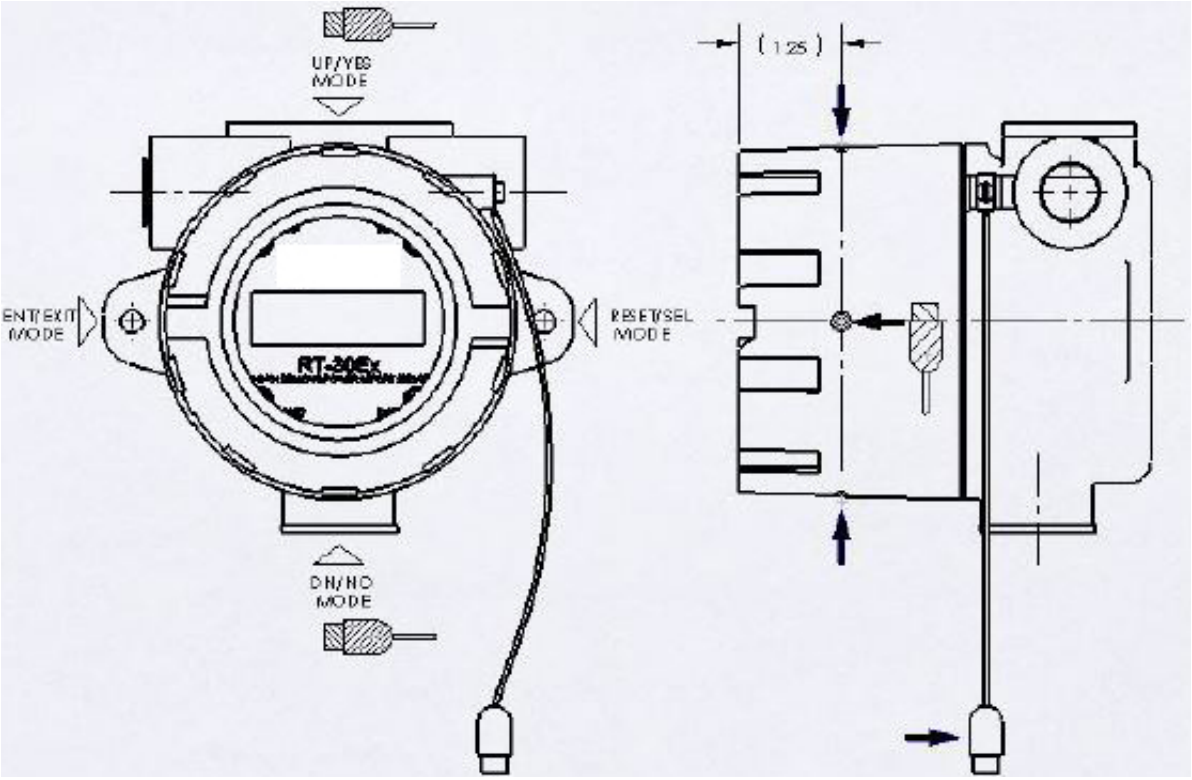

Figure 19: Single access magnetic switch locations

PROGRAMMING

Entering Programming Mode

The RT-30EX *Programming Mode* can be accessed from 4 of the *Run Mode* screens; *RATE*, *TOTAL*, *ANALOG OUT* and *LIMIT* L1/L2. To enter the programming menu from these screens, press and hold the **ENT** button for 3 seconds until one of the programming screens appears. See *Figure 20*.

The *Programming Menu* shows the screen relevant to the *Run Mode* screen from which the programming menu was entered. Use the buttons to navigate through the screens. When exiting the programming menu, the RT-30EX transmitter will always return to the *Run Mode* screen from which the programming menu was entered.

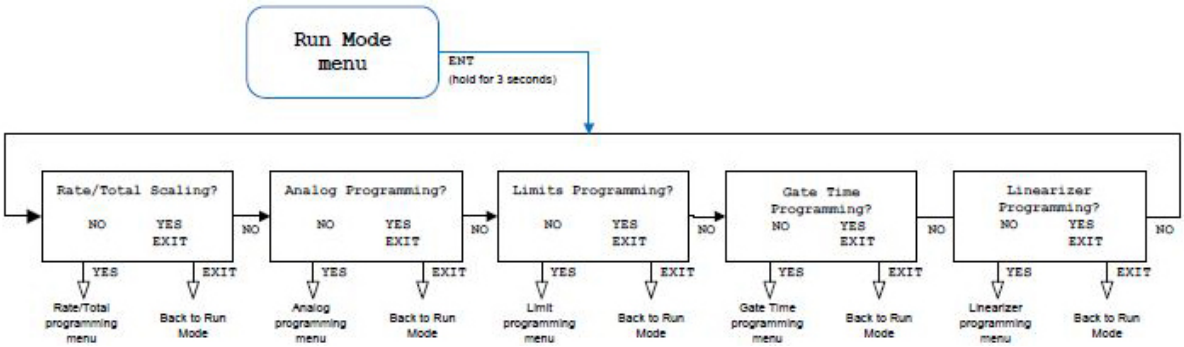

Figure 20: Main programming menu

Changing Values and Making Selections

On a programming screen where a value needs to be changed, the active character is indicated by an underscore. To increase the value, use the *UP* button and to decrease the value use the *DN* button. The character value will wrap around when reaching either 9 or 0.

Once a character has been changed, press the **SEL** button to move to the next character to the right. If at the rightmost character, pressing *SEL* will bring the cursor back to the leftmost character.

If a value has a decimal point whose position can be changed, press the **SEL** button until the underscore is under the decimal point. Press the **DN** button to move the decimal point to the left and press the **UP** button to move the decimal point to the right.

NOTE: Not all programming screens allow the decimal point location to be changed (for example, any milliamp value).

Once a variable has been changed, press the **ENT** button to accept the value and move to the next screen or programming value. If an incorrect value is programmed, a warning screen appears. Press any button to exit a warning screen.

Find Quality Products Online at: Valuetesters.com info@valuetesters.com

Rate/Total Scaling

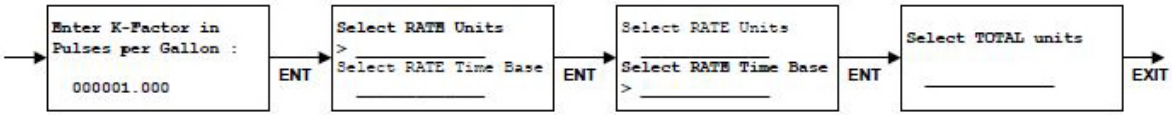

Figure 21: RATE, TOTAL and GRAND TOTAL scaling

K-factor (Scaling Factor)

The RT-30EX transmitter uses only one K-factor for scaling all displays. This value is always entered in units of Pulses per Gallon. Once the rate and total units are selected, the RT-30EX transmitter uses internal calculations to automatically correct the displayed values to match the user selected units. When the correct K-factor value has been programmed, press **ENT** to continue.

RATE Units

Use the *UP* and *DN* buttons to scroll through the available engineering units:

- GAL (US gallons)
- LIT (Liters)
- CC (Cubic centimeters)
- BBL (Barrels)
- ML (Milliliters)
- M3 (Cubic meters)
- OZ (Liquid ounces)
- PUL (Pulses)

Once the desired unit is showing, press **ENT** to continue.

RATE Time Base

Use the *UP* or *DN* buttons to select the time base to use in conjunction with the previously selected *RATE Units* to define the flow rate unit:

- Seconds
- Minutes
- Hours
- Days

When the correct time base is showing, press **ENT** to continue.

NOTE: If the *RATE Unit/RATE Time Base* are selected as *PUL/Seconds*, the *RATE* screen will show the unit as *Hz*, NOT as *PUL/SEC*.

Find Quality Products Online at: Valuetesters.com **info@valuetesters.com**

TOTAL Unit

Use the *UP* and *DN* buttons to scroll through the available units to scale the *TOTAL Units* and *GRAND TOTAL* screens:

- GAL (US gallons)
- LIT (Liters)
- CC (Cubic centimeters)
- BBL (Barrels)
- ML (Milliliters)
- M3 (Cubic meters)
- OZ (Liquid ounces)
- PUL (Pulses)

The *RATE Units* and *TOTAL Units* do not have to be the same. Once the desired unit is showing, press **ENT** to complete the scaling programming and return display to the main programming menu.

Analog Programming

When entering the *Analog Output* programming menu, the first screen asks to select the *Analog Source*, or what the *Analog Output* value is to represent. There are 4 choices (see *Figure 22*).

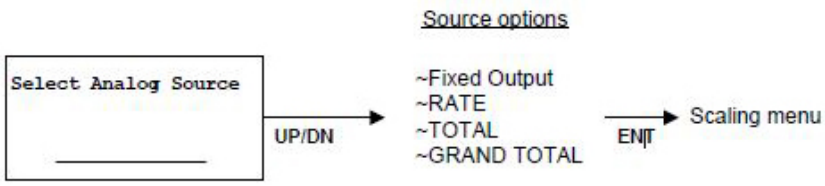

Figure 22: Analog source selection screen

Use the *UP* and *DN* buttons to scroll through the 4 choices that the mA output can represent: a fixed mA output value, the input flow rate, the totalizer value or the grand totalizer value. Press **ENT** when your selection is showing.

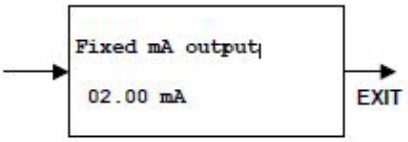

Figure 23: Fixed mA output programming

Use *Fixed Output* option to select a constant mA value the RT-30EX transmitter will output regardless of any changing values. A constant mA signal could be used as an external indicator showing if the RT-30EX transmitter is on. Allowable values are from 2…20 mA.

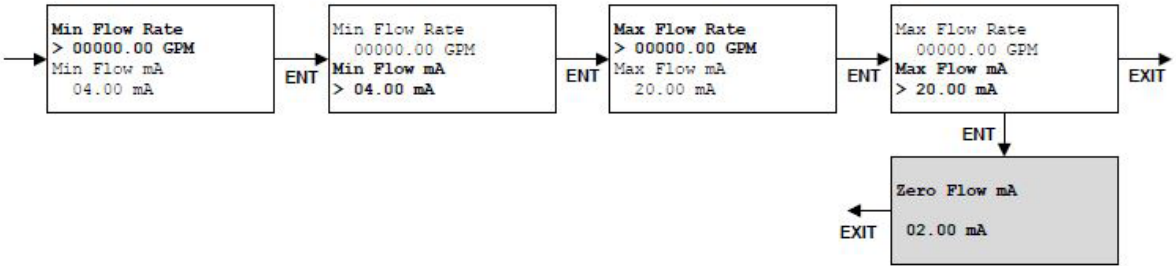

Figure 24: Analog Output, RATE Source programming screens

RATE source lets you configure the mA output to represent the flow rate value. The *Analog Output* span can be scaled for either zero to max flow or a non-zero flow to max flow. If the flow rate goes above the programmed maximum flow rate, the *Analog Output* will continue to increase, up to a maximum of 22mA. This is useful for system fault detection.

Min Flow Rate

Enter the minimum user flow rate. This can be a non-zero value, such as the lowest application flow rate if the equipment monitoring the mA signal can be programmed as such. It can also be entered as zero, but in this case it will affect the accuracy of the mA reading vs flow accuracy. If a non-zero value is entered, the user will also be asked to enter a mA value to represent zero flow.

Min Flow mA

Enter the mA to represent the above entered minimum flow rate. Value must be equal to or greater than 2mA.

Max Flow Rate

Enter the maximum flow rate to monitor.

Max Flow mA

Enter the mA value to represent the above entered maximum flow rate value. 20mA is the maximum allowable value.

Zero Flow mA

This screen only shows if the *Min Flow Rate* was programmed as a non-zero value. Enter the mA value to represent zero flow. Lowest value allowable is 2 mA and it cannot be greater than the *Min Flow mA* value.

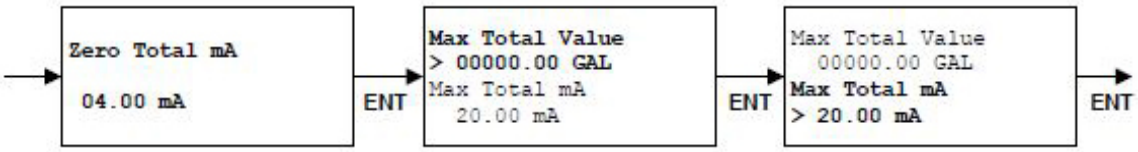

Figure 25: Analog Output, TOTAL source programming screens

Use *TOTAL Source* to configure the mA output to represent the *Totalizer Value*. If the *Totalizer Value* goes above the programmed maximum total value, the *Analog Output* will continue to increase, up to a maximum of 22 mA. This is useful for system fault detection.

Zero Total mA

Enter the mA value to represent a zero *Totalizer Value*. Minimum allowable value is 2 mA.

Max Total Value

Enter the maximum *Totalizer Value* to monitor.

Max Total mA

Enter the mA to represent the above entered maximum totalizer value. Maximum allowable value is 20 mA.

Figure 26: Analog Output, GRAND TOTAL source programming screens

GRAND TOTAL source allows you to configure the mA output to represent the *Grand Total Value*. If the *Grand Total Value* goes above the programmed maximum *Grand Total Value*, the *Analog Output* will continue to increase, up to a maximum of 22 mA. This is useful for system fault detection.

Zero Grand Total mA

Enter the mA value to represent a zero *Grand Total Value*. Minimum allowable value is 2 mA.

Max Grand Total Value

Enter the maximum *Grand Total Value* to monitor.

LIMITS Programming

Three opto-isolated NPN open-collector outputs can sink or source depending on connection (that is, power can flow in or out). See *"Analog Output" on page 8*.

NOTE: Connection polarity: collector (+), emitter (-). See *Figure 6 on page 8*.

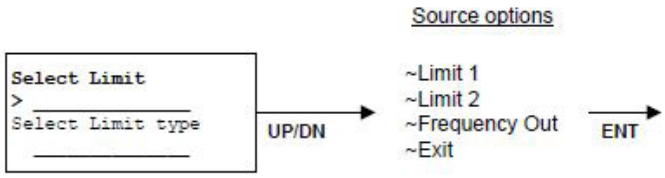

Figure 27: Limits programming choices

From the first screen, select the output to be programmed. All three outputs can be independently set up:

- Limit 1
- Limit 2
- Frequency Out

If any of the outputs are not to be used, they can be turned off. *Limit 1* and *Limit 2* can be configured as a frequency output matching the incoming frequency from the flow meter, as a totalizer cycle output, a flow rate setpoint trigger or to trigger on a set value of the *Total* or *Grand Total*. The third, *Frequency Out*, can only be used to output the incoming frequency from the flow meter.

To exit the *LIMIT* programming screen, press the **UP** or **DN** button until *Select Limit* option shows *Exit*. Then press the **EXIT** button.

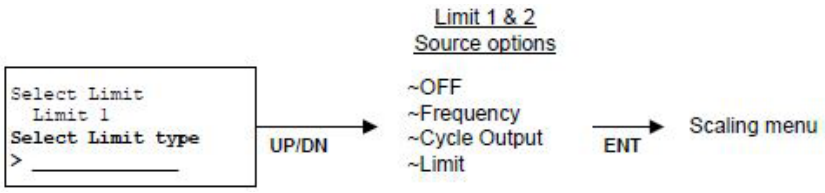

Figure 28: Limit 1 & Limit 2 Output options

Turn Limits OFF

To turn off either of the Limits, choose the **OFF** *Limit Type* and press **ENT**. The corresponding Limit pin will now stay low regardless of any variable changes.

Frequency Output on Limit Pins

To have the incoming frequency be routed to a *LIMIT* pin, choose the *Frequency Out* option. There is no other programming required.

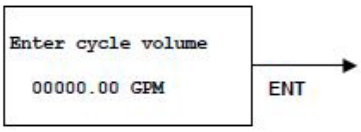

Figure 29: Cycle Output volume scaling

Cycle Output (Pulsed Output)

The *CYCLE OUT* limit function provides an incremental output signal for a remote totalizer, typically at a lower resolution and frequency. Assigning a limit to the *CYCLE OUT* function toggles the state of the limit output whenever the *TOTAL* increments by the programmed cycle amount. The output remains ON until the cycle amount accumulates and does not turn OFF until the cycle amount accumulates again. See *Figure 30 on page 20*. The total accumulated between a rising and falling edge is the cycle value. The total accumulated between any two rising edges is twice the cycle value. You enter the cycle value in programmed engineering total units.

Find Quality Products Online at: Valuetesters.com info@valuetesters.com

⚠CAUTION

DO NOT PROGRAM A CYCLE AMOUNT THAT PRODUCES MORE THAN 20 PULSES PER SECOND (20 HZ).

Consider the maximum flow rate to determine the resulting output frequency. The frequency produced (in Hz) is the actual *Flow Rate* in engineering units per minute divided by 120, divided by the *CYCLE AMOUNT*.

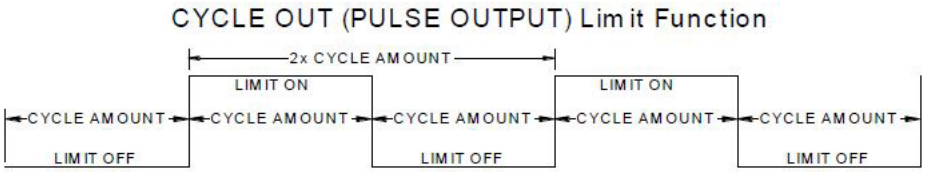

Figure 30: Cycle Output definition

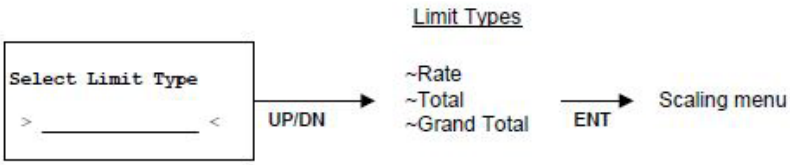

Figure 31: Limit Output Sources

Each *LIMIT* can be set to trigger its output based on a certain *Flow Rate* or *Total Setpoint*. This is often used to indicate if a *Flow Rate* is outside its intended limits or if a certain total value has been reached in a batch application.

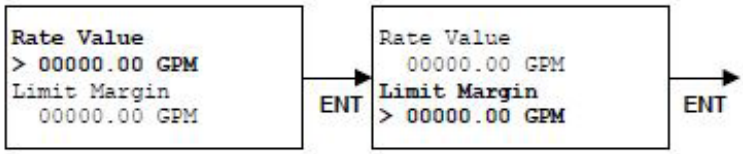

Figure 32: Rate limit variables

Rate Value

The limit output will be off if the incoming *Flow Rate* is below the programed *Rate Value* and the output will be on if the incoming flow rate is equal to or above the programmed *Rate Value*.

Limit Margin

The *Limit Margin* variable is programmed in engineering units and determines whether the *Rate Limit* functions as an absolute limit or activates within a margin or "window" around the programmed *Rate Value*. When the *Limit Margin* is programmed as zero, the limit activates whenever the *Flow Rate* equals or exceeds the programmed value. When you enter a *Limit Margin* value other than zero, the limit is active whenever the selected *Flow Rate* is within the "window" of the programmed *Rate Value*, plus or minus the *Limit Margin* value. The programmed *Limit Margin* must be less than the programmed *Rate Value*.

Find Quality Products Online at: Valuetesters.com **info@valuetesters.com**

TOTAL Limit and GRAND TOTAL Limit

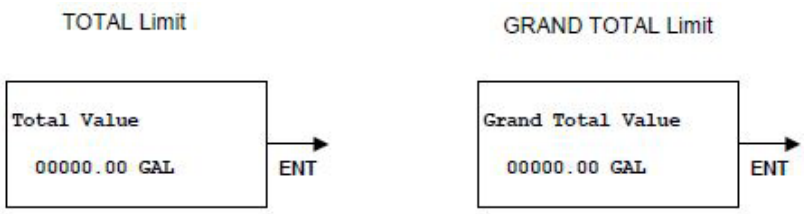

Figure 33: Total & grand total limit variables

Total Value and Grand Total Value

Enter the *Total Value* or *Grand Total Value* at which the respective *Limit* output should change state. When the *Total Value* or *Grand Total Value* is reset to zero, the *Limit* pin changes back to initial state.

Frequency Output Programming

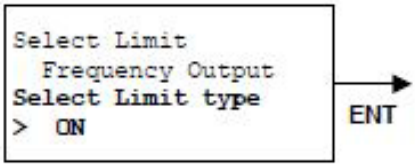

Figure 34: Frequency Output Programming

The third output can only be set to output the incoming frequency. From the top *Limits Programming* menu, choose the *Frequency Output* option, press **ENT** and use the *UP* or *DN* button to turn on the *Frequency Output*. There are no other variables to program. The *Frequency Output* is not affected by the *Gate Time Filter* and cannot be linearized. It is always the raw incoming frequency from the sensor.

Gate Time Filter Programming

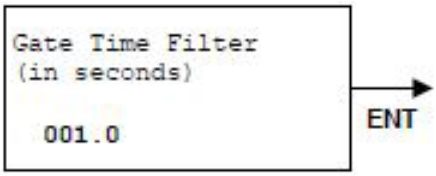

Figure 35: Gate Time variable

The *Gate Time Filter* sets the sample time on the incoming frequency for the *RATE* displays. Programmed in tenths of a second with an allowable range from 0.1…999.9 seconds, this variable affects the update of the display and *Analog Output*, and is useful in stabilizing the display and output when dealing with fluctuating flow rates. Setting the *Gate Time Filter* to zero (0) disables the *Gate Time Filter* and all data is updated at an internal default rate of approximately 0.02 seconds. If the *Gate Time Filter* is active (any non-zero value), any *Run Mode* screen affected by the filter will show "GT" in the lower right corner of the screen.

Linearizer Programming

The RT-30EX transmitter has a 30-point *Linearizer* that can be used to increase the linearity of the *Flow Rate* reading. When entering the *Linearizer* programming mode, the first question asked is if the *Linearizer* should be activated. If the *Linearizer* has already been programmed, de-activating the *Linearizer* does not erase any previously programmed table values. It only turns off the use of the *Linearizer* and causes the RT-30EX transmitter to use the single programmed K-Factor value under the *Rate/Total Scaling* programming menu for its calculations. If the *Linearizer* is used, the minimum number of points required for programming is 2.

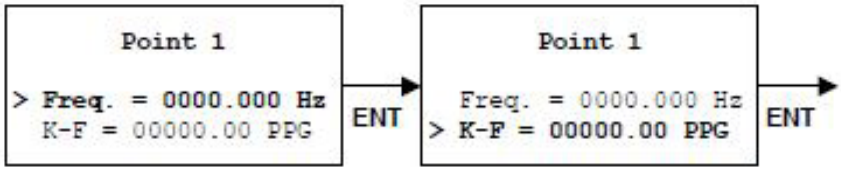

Figure 36: Linearizer variables

When programming the *Linearizer*, each table point requires a *Frequency Value* and *K-Factor* to be entered. To obtain these values it may be necessary to have a separate calibration done on the flow meter ahead of time. Often this information can be found on the original calibration sheet from the manufacturer.

Freq. Variable

When populating the *Linearizer* table, it is required that *Point 1* has the lowest frequency and each subsequent table point frequency must be in continuously increasing frequency value. The *Frequency Value* represents the signal from the flow meter at each *Flow Rate* to be programmed into the *Linearizer* table.

K-F Variable

The *K-Factor* is the scaling factor in pulses per gallon for each frequency programmed.

When the *Linearizer* table points have been programmed, on the next table point leave the frequency value as zero and press **ENT** to save the table values and exit the *Linearizer Programming* menu.

Clearing the Linearizer Table

To clear a previously programmed *Linearizer* table, enter the *Linearizer* table and change *Point 1 Frequency Value* to zero (0)and press **ENT**. The RT-30EX transmitter will display a warning that all table values will be cleared. If this is correct, press the **YES** button. All the table values are set to zero and the *Linearizer* turns OFF. Alternatively, press **NO** to cancel and return to *Point 1* programming screen.

Changing the Linearizer Table

To change a table *Point* value, enter the programming screen and press the **ENT** button to get to the table value to change. After changing the relevant values, continue pressing the **ENT** button through the remaining table values until reaching the end of the programmed table (first table point whose *Frequency Value* is zero) to exit the table.

Adding Linearizer Table Point

Data can only be added to the end of a table. Therefore, if the additional point(s) to add do not have a frequency greater than the last entered point, you must manually shift the table points by entering the new points after the next smallest existing value and then re-entering the remaining points.

If an existing table is changed and has more points than required, once the required points have been entered and the next table value has the *Frequency Value* changed to zero, all remaining points will automatically be reset to zero when exiting the table.

CALIBRATING ANALOG OUTPUT

The *Analog Output* can be calibrated to correct for any variances caused by the user's input equipment. Use the calibration routine to adjust the 4 mA and 20 mA output values.

Enter the calibration routine from the *STATUS* screen.

NOTE: The calibration routine ignores any incoming frequency to the RT-30EX transmitter.

Before starting the calibration routine, make sure the *Analog Output* is connected to the intended readout equipment. To calibrate the RT-30EX transmitter, enter the *Analog Value* read from the user's readout equipment.

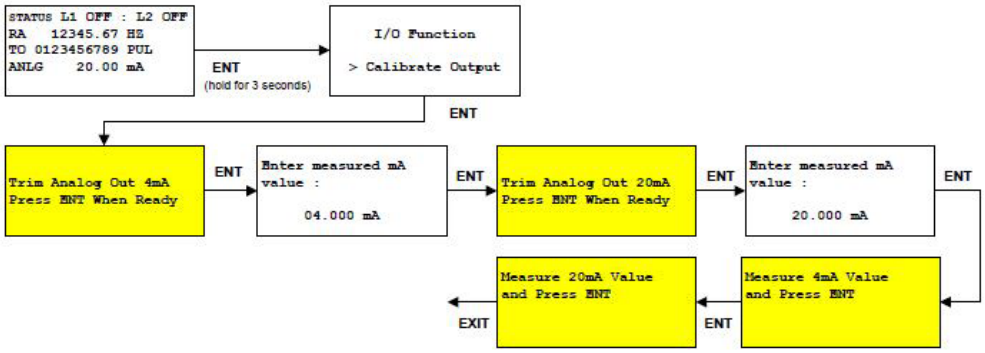

Figure 37: Analog output calibration routine

From the *Run Mode STATUS* screen, press and hold the **ENT** button for 3 seconds to enter the *I/O Function* programming screen. Press the *UP* or *DN* button to display the *Calibrate Output* choice and then press **ENT**.

Find Quality Products Online at: Valuetesters.com info@valuetesters.com

At the first mA adjustment screen, the RT-30EX transmitter outputs the value that should equal 4 mA output. Adjust the mA value to match the value shown on the user's readout equipment and press **ENT** when done.

At the second mA adjustment screen, the RT-30EX transmitter outputs the value that should equal 20 mA output. Adjust the mA value to match the value shown on the user's readout equipment and press **ENT** when done.

At the next screen, the RT-30EX transmitter outputs the corrected 4 mA value. At the last screen the RT-30EX transmitter outputs the corrected 20 mA value. If either measured output is still not close enough to the required value, enter the calibration routine again. When done, press **EXIT** until back at *STATUS* screen.

I/O MANUAL ADJUSTMENT

Whether for troubleshooting purposes or to manually control external equipment, the RT-30EX transmitter has an I/O routine in which the *Analog Output*, *Limit Outputs* and *Frequency Outputs* can be controlled and the external *Reset* input can be monitored. A good use of this feature is to verify communication between the RT-30EX transmitter outputs and the user's readout equipment in a controlled fashion before final system installation.

When entering the *I/O Programming Mode* from the *STATUS* screen, use the *UP* or *DN* button to change the *I/O Function* to *Test output* and press **ENT**. Next, choose which I/O to change. See *Figure 38*.

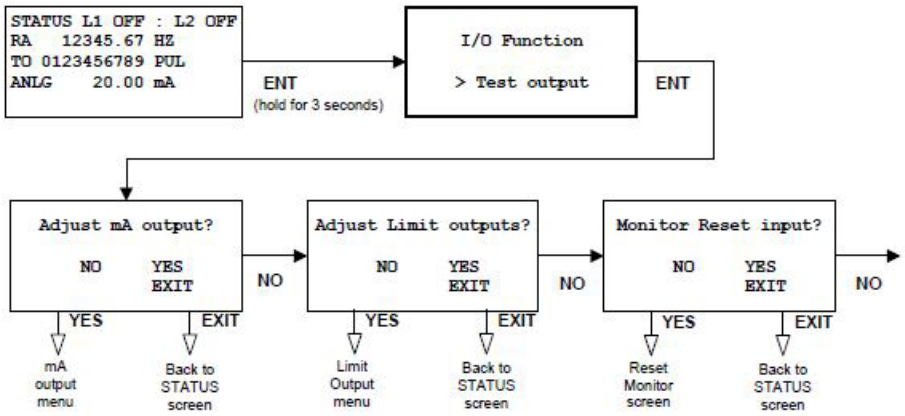

Figure 38: I/O adjustment top menu

Analog Output Adjustment

There are two ways to manually control the mA output to any value between 2…20 mA:

- *Fine adjustment* lets you program a specific mA value to output.
- *Coarse adjustment* lets you increment or decrement the mA value in 1 mA steps using the *UP* and *DN* buttons.

Fine mA Adjustments

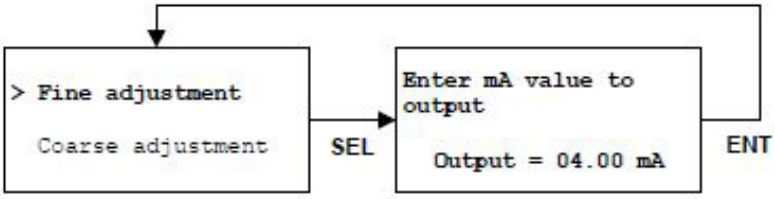

Figure 39: Fine mA output adjustment screens

The *Fine adjustment* option screen shows the active mA output value. Change this number to any value between 2…20 mA and press **ENT**. The RT-30EX transmitter will output this value. This also returns the screen to the *Adjustment Type* screen. Press **SEL** to see output value again and make new changes.

Coarse mA Adjustments

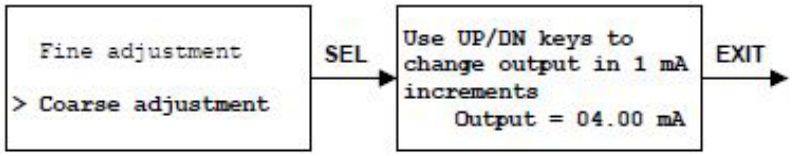

Figure 40: Fine mA output adjustment screens

The *Coarse Adjustment* option shows the edit screen for the mA output displays. Press the **UP** button to increment the screen value (and mA output value) by 1 mA to a maximum of 20 mA. Press the **DN** button to decrement the screen value (and mA output value) by 1 mA to a minimum of 2mA. This is the fastest way to test the mA output range if no specific mA output value is required. Press the **EXIT** button to leave this mode.

Limit and Frequency Adjustment

There are three ways to manually control the *Limit* and *Frequency Outputs* and change states simultaneously:

- *Fine adjustment* lets you enter a specific frequency to output between 2…4500 Hz.
- *Coarse adjustment* lets you output a frequency and change the rate in 25 Hz increments using the *UP* and *DN* buttons.
- The *ON/OFF adjustment* lets you individually toggle the output state between on and off using the *UP*, *DN* and *SEL* buttons.

Fine Limit Output Adjustments

When choosing the *Fine Adjustment* option, the screen shows the active *Frequency Output* value on the Limit 1, Limit 2 and *Frequency Outputs*. Change this number to any desired value between 2…4500 Hz and press **ENT**. The RT-30EX will output this value on the 3 outputs at the same time. This also returns the screen to the adjustment type screen. Press **SEL** to see the output value again and make new changes.

Course Limit Output Adjustment

When choosing the *Course adjustment* option, the edit screen for the *Frequency Output* value displays. Press the **UP** button to increment the screen value (and Hz output value) by 25 Hz to a max of 4500 Hz. Press the **DN** button to decrement the screen value (and Hz output value) by 25 Hz to a min of 2 Hz. Press the **EXIT** button to leave this mode.

ON/OFF Limit Output Adjustment

When choosing the *ON/OFF adjustment* option, the screen shows the current state of each output pin. By pressing the *UP*, *DN* and *SEL* buttons, each associated output changes the state. See *Figure 41*.

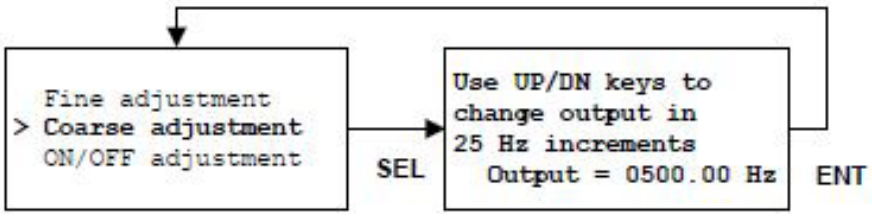

Figure 41: ON/OFF Limit adjustment screens

Monitor External Reset Input

When choosing the *Monitor Reset input* option, if the external reset input will be used to reset the *TOTAL* value, this screen will show the current state of the pin as interpreted by the RT-30EX firmware.

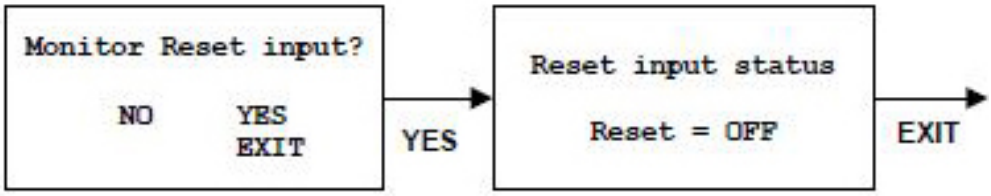

Figure 42: External Reset input monitor screens

To monitor the current state of the external *Reset* pin, press the **YES** button from the *Monitor Reset input* screen. The screen that follows will show what the current state of the pin is. Using an external control signal, toggle the voltage level between high and low and monitor that the RT-30EX also sees the change.

DIMENSIONS

Single Access Enclosure (shown with HUB-40 sensor)

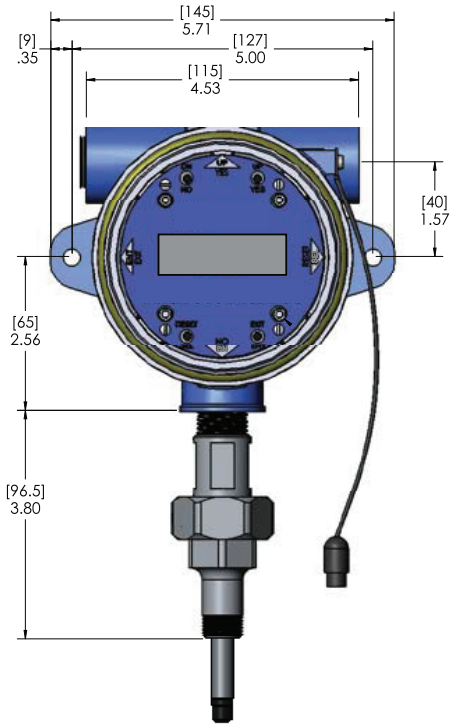

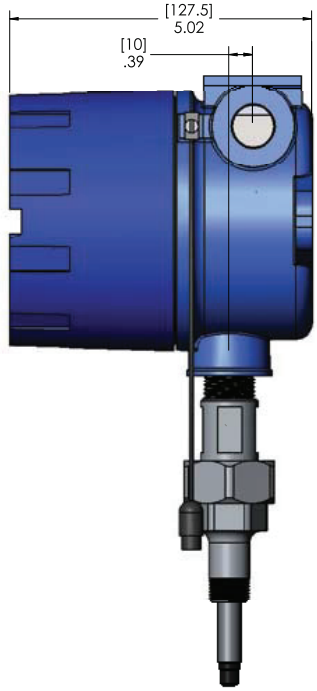

Dual Access Enclosure (shown with HUB-40 sensor)

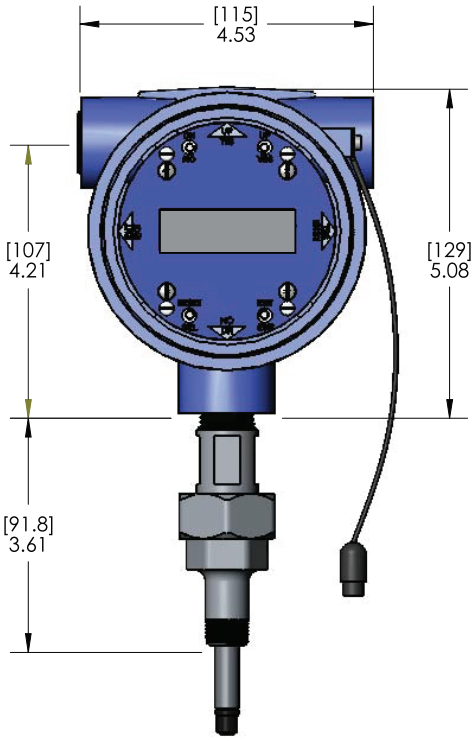

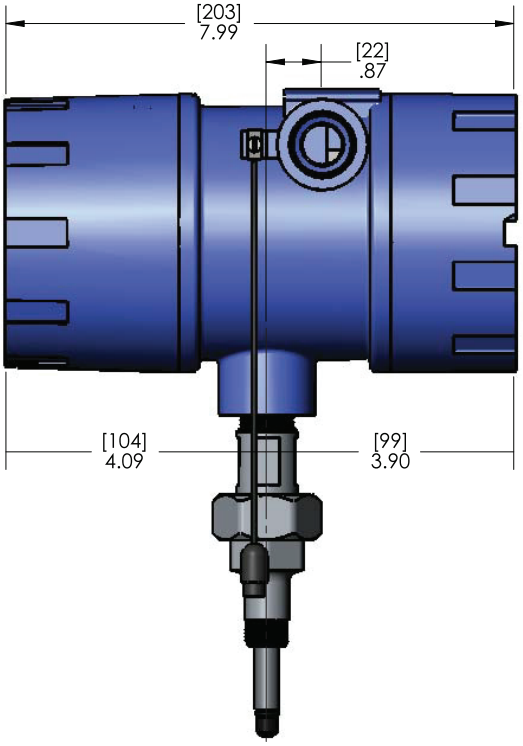

Control. Manage. Optimize.

Blancett is a registered trademark of Badger Meter, Inc. Other trademarks appearing in this document are the property of their respective entities. Due to continuous research, product improvements and enhancements, Badger Meter reserves the right to change product or system specifications without notice, except to the extent an outstanding contractual obligation exists. © 2021 Badger Meter, Inc. All rights reserved.

Find Quality Products Online at: Valuetesters.com **info@valuetesters.com**